KOREAN VEHICLES

FOREIGN VEHICLES (PAD)

FOREIGN VEHICLES (LINING)

TM FRIXA BRAKE SYSTEM

Product Catalogue Ver.06

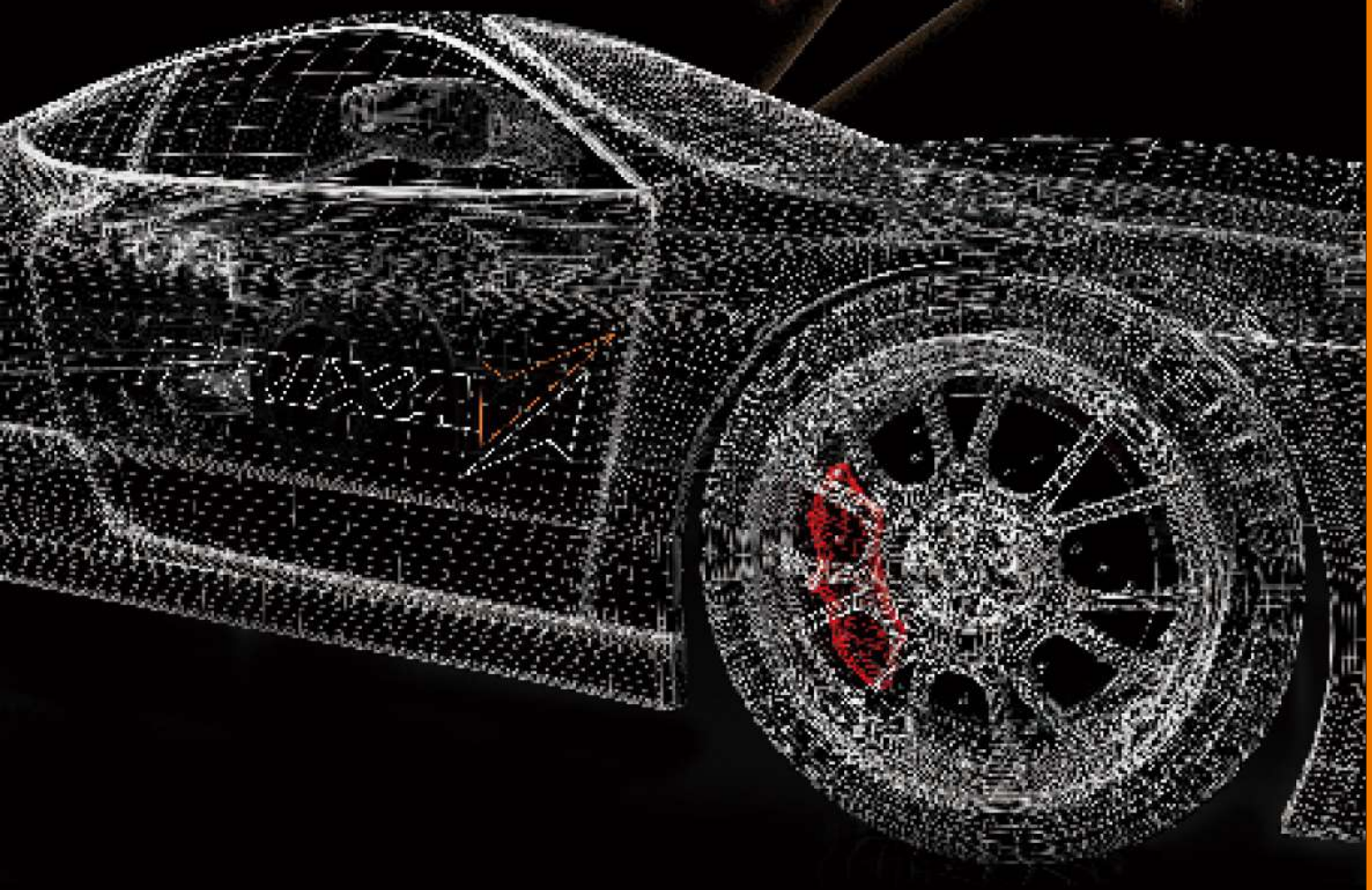

Distributed by

Hankook driving emotion

TM FRIXA BRAKE SYSTEM

Distributed by Hankook driving emotion

New Brake Pads·Linings

TM FRIXA BRAKE SYSTEM

Did you notice that the brake pedal is typically bigger than the acceleration pedal in a car?

For most cars, stopping is more critical than accelerating In order to achieve certain speed specifications, the car must come with an equally strong brake system.
The brake pads/linings are keeping your life safe when you enjoy driving.

New Brake Pads · Linings, FRIXA

NEW

To save lives, the brake system must operate instantaneously,
1 second and 1 cm faster.
With worldwide patents on state-of-the-art brake materials and technologies,
FRIXA Co., Ltd. deeply cares about brake power, brake reliability, brake noise,
the environment, and most importantly, human life.
Please look at your brake pads / linings now!
Then, switch to FRIXA brake pads / linings.
FRIXA, newly improved brake pads / linings, will keep your life safe.

TM FRIXA BRAKE SYSTEM

172, Guryong-ri, Byeollyang-myon, Suncheon-city, Jeonnam, Korea
Tel : +82-61-742-5821 Fax : +82-61-742-5825
Web-page : www.frixa.com E-mail : export@frixa.com

STOP WITH NO ERROR

Acknowledged all over the world for its up-to-date brake engineering and technical power, FRIXA cares not only about durability, noise reduction, enviromental friendliness but also your life.

NEW

New Brake Pads-Linings
™ FRIXA BRAKE SYSTEM

In automobiles, ***the ability to stop*** *is much more important than to accelerate.*

While driving, we all wish to feel safe with the brake that reacts and responds just as quickly as our body does.
Change to FRIXA today. The moment you step on it, the FRIXA brake pad gives you comfort of stopping without any error.
The more powerful brake pads – FRIXA

BRAKE SYSTEM CONTENTS

1] Company Info

GREETINGS	P06
HISTORY	P07
TECHNICAL CERTIFICATES	P08
CORE TECHNOLOGY	P09
S1	P12
COMPETITION	P14
TAXI / ULTRA	P16
LIGHT TRUCK	P18
HEAVY-DUTY VEHICLE	P20
ARABIC	P22

2] Product List

KOREAN VEHICLES	P30
FOREIGN VEHICLES(PAD)	P49
FOREIGN VEHICLES(LINING)	P69

3] Product Drawing KOREAN VEHICLES

FLD01	78p	FLS01	90p	FPH10	102p	FPH44	114p	FPK27	126p
FLD02	78p	FPD01	90p	FPH10N	102p	FPH45	114p	FPK28	126p
FLD03	78p	FPD02	90p	FPH11	102p	FPH45R	114p	FPK29	126p
FLD04	78p	FPD03	90p	FPH11N	102p	FPH46	114p	FPK30	126p
FLD07	79p	FPD05	91p	FPH12	103p	FPH47	115p	FPK30R	127p
FLD08	79p	FPD06	91p	FPH12R	103p	FPH47R	115p	FPK31	127p
FLD09	79p	FPD07	91p	FPH14	103p	FPH48	115p	FPK32	127p
FLD10	79p	FPD08	91p	FPH15	103p	FPHXDF	115p	FPK32R	127p
FLD11	80p	FPD08R	92p	FPH16	104p	FPHXGF	116p	FPK33	128p
FLD11-1	80p	FPD09	92p	FPH17	104p	FPHXGN	116p	FPK33R	128p
FLH01	80p	FPD10	92p	FPH17R	104p	FPHXGR	116p	FPK34	128p
FLH012	80p	FPD10R	92p	FPH19	104p	FPK01	116p	FPK34R	128p
FLH013	81p	FPD12	93p	FPH19R	105p	FPK01N	117p	FPK35	129p
FLH02	81p	FPD12NR	93p	FPH20	105p	FPK01NR	117p	FPS01	129p
FLH02F	81p	FPD12R	93p	FPH21	105p	FPK02	117p	FPS01NR	129p
FLH06	81p	FPD13	93p	FPH22	105p	FPK03	117p	FPS01R	129p
FLH07	82p	FPD(T)14	94p	FPH23	106p	FPK04	118p	FPS02	130p
FLH09	82p	FPD15	94p	FPH23R	106p	FPK04N	118p	FPS03	130p
FLH10	82p	FPD16	94p	FPH24	106p	FPK04R	118p	FPS03R	130p
FLH11	82p	FPD16R	94p	FPH24R	106p	FPK05	118p	FPS04	130p
FLH12	83p	FPD17	95p	FPH25	107p	FPK06	119p	FPS04R	131p
FLH13	83p	FPD17R	95p	FPH25R	107p	FPK06R	119p	FPS05	131p
FLH14	83p	FPD18	95p	FPH26	107p	FPK07	119p	FPS05R	131p
FLH16	83p	FPD19	95p	FPH26R	107p	FPK7N	119p	FPS06	131p
FLH17	84p	FPD19R	96p	FPH27	108p	FPK08	120p	FPS06R	132p
FLK01	84p	FPD20	96p	FPH28	108p	FPK09	120p	FPS07	132p
FLK02	84p	FPD21	96p	FPH28NR	108p	FPK10	120p	FPS08	132p
FLKT02	84p	FPD22	96p	FPH29	108p	FPK10N	120p	FPS08R	132p
FLK03	85p	FPD23	97p	FPH30	109p	FPK11	121p	FPS09	133p
FLK04	85p	FPD24	97p	FPH31R	109p	FPK13	121p	FPS10	133p
FLK07	85p	FPD24R	97p	FPH31NR	109p	FPK14N	121p	FPS10R	133p
FLK08	85p	FPH01	97p	FPH32	109p	FPK15	121p	FPS11	133p
FLK082	86p	FPH01R	98p	FPH33	110p	FPK15R	122p	FPS11R	134p
FLK10	86p	FPH02	98p	FPH33R	110p	FPK16	122p	FPY01	134p
FLK10N	86p	FPH02F	98p	FPH34	110p	FPK17	122p	FPY02	134p
FLK13	86p	FPH02NF	98p	FPH35	110p	FPK17N	122p	FPY03	134p
FLK13N	87p	FPH02NR	99p	FPH35R	111p	FPK18	123p	FPY03R	135p
FLK14	87p	FPH02S	99p	FPH35NR	111p	FPK19	123p	FPY04	135p
FLK14N	87p	FPH04	99p	FPH36	111p	FPK20	123p	FPY04R	135p
FLK15	87p	FPH04R	99p	FPH36R	111p	FPK20N	123p	FPY05R	135p
FLK15N	88p	FPH05	100p	FPH37	112p	FPK20NR	124p	FPY06	136p
FLK16	88p	FPH05R	100p	FPH38	112p	FPK20R	124p	FPY07	136p
FLK17	88p	FPH06	100p	FPH38R	112p	FPK22	124p	FPY08	136p
FLK18	88p	FPH07	100p	FPH39	112p	FPK23	124p		
FLK19	89p	FPH08	101p	FPH40	113p	FPK24	125p		
FLK20	89p	FPH09	101p	FPH41	113p	FPK25	125p		
FLK21	89p	FPH09N	101p	FPH42	113p	FPK25R	125p		
FLK22	89p	FPH09R	101p	FPH43	113p	FPK26	125p		

4] Product Drawing FOREIGN VEHICLES (PAD)

FPE011	137p	FPE089	149p	FPE151	161p	FPE220	173p
FPE012	137p	FPE090	149p	FPE152	161p	FPE221	173p
FPE013	137p	FPE091	149p	FPE156	161p	FPE222	173p
FPE014	137p	FPE092	149p	FPE157	161p	FPE223	173p
FPE015	138p	FPE096	150p	FPE158	162p	FPE224	174p
FPE016	138p	FPE097	150p	FPE159	162p	FPE225	174p
FPE017	138p	FPE098	150p	FPE160	162p	FPE227	174p
FPE06	138p	FPE099	150p	FPE161	162p	FPE229	174p
FPE018	139p	FPE100	151p	FPE162	163p	FPE233	175p
FPE019	139p	FPE101	151p	FPE163	163p	FPE234	175p
FPE020	139p	FPE102	151p	FPE164	163p	FPE235	175p
FPE021	139p	FPE103	151p	FPE165	163p	FPE236	175p
FPE022	140p	FPE104	152p	FPE166	164p	FPE237	176p
FPE023	140p	FPE105	152p	FPE167	164p	FPE238	176p
FPE024	140p	FPE108	152p	FPE168	164p	FPE239	176p
FPE024N	140p	FPE109	152p	FPE169	164p	FPE240	176p
FPE024NR	141p	FPE110	153p	FPE170	165p	FPE241	177p
FPE025	141p	FPE111	153p	FPE173	165p	FPE242	177p
FPE026	141p	FPE113	153p	FPE174	165p	FPE244	177p
FPE027	141p	FPE114	153p	FPE175	165p	FPE246	177p
FPE028	142p	FPE115	154p	FPE176	166p	FPE247	178p
FPE029	142p	FPE116	154p	FPE178	166p	FPE248	178p
FPE030	142p	FPE117	154p	FPE179	166p	FPE252	178p
FPE031	142p	FPE118	154p	FPE180	166p	FPE255	178p
FPE035	143p	FPE119	155p	FPE181	167p	FPE256	179p
FPE036	143p	FPE122	155p	FPE182	167p	FPE260	179p
FPE037	143p	FPE123	155p	FPE183	167p	FPE261	179p
FPE038	143p	FPE124	155p	FPE184	167p	FPE262	179p
FPE039	144p	FPE125	156p	FPE185	168p	FPE264	180p
FPE040	144p	FPE126	156p	FPE186	168p	FPE265	180p
FPE041	144p	FPE127	156p	FPE187	168p	FPE266	180p
FPE042	144p	FPE128	156p	FPE189	168p	FPE267	180p
FPE043	145p	FPE129	157p	FPE190	169p	FPE268	181p
FPE047	145p	FPE130	157p	FPE191	169p	FPE366	181p
FPE048	145p	FPE131	157p	FPE192	169p		
FPE053	145p	FPE132	157p	FPE193	169p		
FPE057	146p	FPE133	158p	FPE194	170p		
FPE058	146p	FPE134	158p	FPE195	170p		
FPE060	146p	FPE135	158p	FPE196	170p		
FPE062	146p	FPE136	158p	FPE197	170p		
FPE064	147p	FPE137	159p	FPE212	171p		
FPE079	147p	FPE138	159p	FPE213	171p		
FPE080	147p	FPE139	159p	FPE214	171p		
FPE082	147p	FPE142	159p	FPE215	171p		
FPE083	148p	FPE143	160p	FPE216	172p		
FPE084	148p	FPE144	160p	FPE217	172p		
FPE087	148p	FPE145	160p	FPE218	172p		
FPE088	148p	FPE149	160p	FPE219	172p		

5] Product Drawing FOREIGN VEHICLES (LINING)

FLE01	182p
FLE02	182p
FLE03	182p
FLE04	182p
FLE05	183p
FLE06	183p
FLE07	183p
FLE08	183p
FLE09	184p
FLE10	184p
FLE11	184p
FLE12	184p
FLE13	185p
FLE14	185p
FLE15	185p
FLE16	185p
FLE17	186p
FLE18	186p
FLE023	186p
FLE024	186p

Through innovative management and high-tech strategy for the best quality,

FRIXA has searched for customer's dignity and has become one of the highest standard global enterprises.

FRIXA, jumping lively towards the world.

Based on the certified technical capability, FRIXA plays a leading role in globalization of Korean technology.

FRIXA was established in August, 1991 with the head office and production site in Suncheon.

It has been developing new products and improving the quality in collaboration with R&D center in Suncheon, and supplying the products through Hankook Tire's distribution network.

FRIXA upgraded its production system by certifications of TS16949 and ISO9001 in January, 2004.

FRIXA products protect driver's safety and enhance comfort with the excellent braking performance, thermal endurance, durability, low noise and minimized wheel dust. It is exporting exellent products to more than 20 countries all over the world.

FRIXA has grown up to a global enterprise with customers' confidence and support, and has come to participate in the brake system parts business for automobiles and industrial machinery, as a part of the Group's business line expansion programme.

Through the continuous development of advanced technology and strict quality control, FRIXA has been recognized as a promising enterprise specializing in the friction material.

Top quality brake pads and eco-friendly products have made FRIXA acknowledged, at home and abroad, as one of the most prominent automotive parts manufacturers.

We are deeply grateful for customers' attention and support that have brought us to achieve all these things, and promise to reciprocate with our continuous passion. Also, we will ceaselessly challenge to become the first class enterprise which considers customers' benefit more important than anything else.

Thank you.

CEO, FRIXA CO., LTD.

Kim, Eun-Soo

- **1991** Company establishment
- **1996** Secured patents in Korea, U. S. A, Japan, Germany
  Certified of Korea Standard
- **2001** Created dedicated R&D division(Korea Industrial Technology Association)
- **2003** Certificed of QS9000 and ISO9001
- **2004** First release of Premium Pad
- **2005** Selected as one of the best products in second half of 2005(by Hankook Ilbo)
  Certified of ISO/TS 16949 and ISO9001
  First release of racing brake pad
- **2006** Designated as a promising export small enterprise
  Contracted for authorized sponsorship of racing brake pads for Speed Festival held by KMRC
- **2007** Designated as a promising small enterprise
- **2008** Secured E mark (E9-90R-01.813/547) authorized by EU
- **2009** First release of racing disc rotor
  Disc brake pad was selected for an officially designated component for 2009 CJ O SUPER RACE held by KGTCR
  Awarded One Million US Dollars as export tower by Ministry of Knowledge and economy
- **2010** Continued Disc brake pad and disc rotor were selected for an officially designed components for 2009 CJ O SUPER RACE held by KGTCR
  Designated as small business of technical innovation
  Awarded various prize by Provincial Government
  Launched "SPY MOTORSPORT" for Caterham race car, UK
  Launched "BURNETT MOTORSPORT" for Legend race car, UK
- **2011** Officially sponsors of ATLAS BX, TEAM106
  TONY KART win the JUNIOR CHAMPIONSHIP in the UK
- **2012** The selection of Officially designation componentry in the KOREA SPEED FESTIVAL
  ISO14001 : Environment management system's certification
  Award Minister prize from the ministry of knowledge Economy
  Award of Export for $3 million
- **2013** Designated as official Stock Car's component suppliers in the CJ Super Race
  Appointed as official component suppliers for the KSF: GENESIS Coupe 20 Class
  Official component suppliers for the Chevrolet Racing Team
  Official sponsors of ATLAS BX Racing Team
  Participation in Automotive week 2013
  Launch of the new S1 Caliper Disc Brake
- **2015** Launch of new office in Seoul
  Acquisition of E-Mark, total 122 products
  MAIN-BIZ and INNO BIZ Certification

Technical Certificates

E-Mark

Form No.100697 Patent

Form No.100698 Patent

Form No.10-0784333 Patent

Form No.10-0784333 Patent

Form No.10-1059548 Patent

Form No.10-1160666 Patent

ISO 9001:2008

ISO/TS 16949:2009

ISO 14001:2004

2012

Three Million Dollar Export Tower

FRIXA Core Technology

- We guarantee the accurate and safe braking system.
- We manufacture and provide the brake system of all kinds of cars from the passenger car to the light truck.
- The products of FRIXA have low noise in all vehicles.

FRIXA Composition

Friction material
Generates braking power by friction with disc.

Slot
A groove cut from the top in the middle of friction surface, along which dust worn by friction material is discharged and it also gives an effect of diminishing noise.

Chamfer
Both ends of friction surface ground to have them sloped down. It gives an effect of diminishing vibration and trembling.

Sensor
It indicates a limit beyond which friction material is not allowed to be worn. Two of four sensors per set is to be attached.

Shim
Prevents heat generated by braking from being transmitted to cylinder, thereby diminishing vibration and minimizing noise.
※ It may not be necessary depending upon characteristics of vehicle.

Back plate
Steel plate to be fixed onto caliper. It bears weight of hydraulic cylinder.

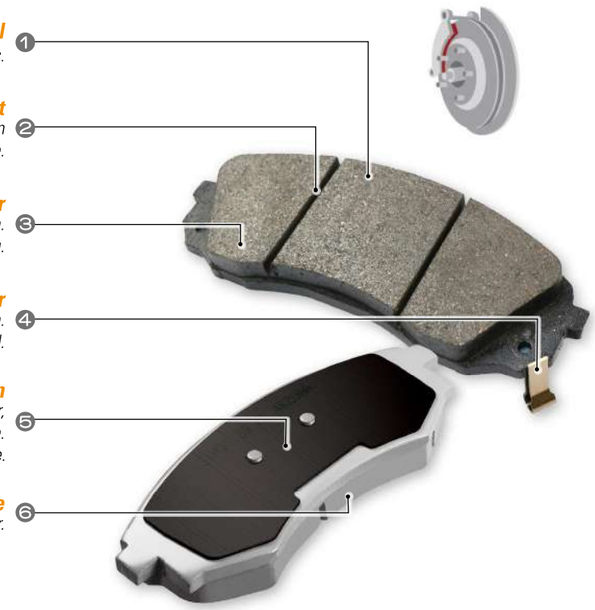

FRIXA Core Technology

Excellent braking control(power)

With average friction co-efficient of 0.36 - 0.40μ, it is excellent in braking power. Though in general braking deviation is caused by variation in speed and temperature, FRIXA is capable of stable braking power under any circumstances.

Fig1. Simulation test data

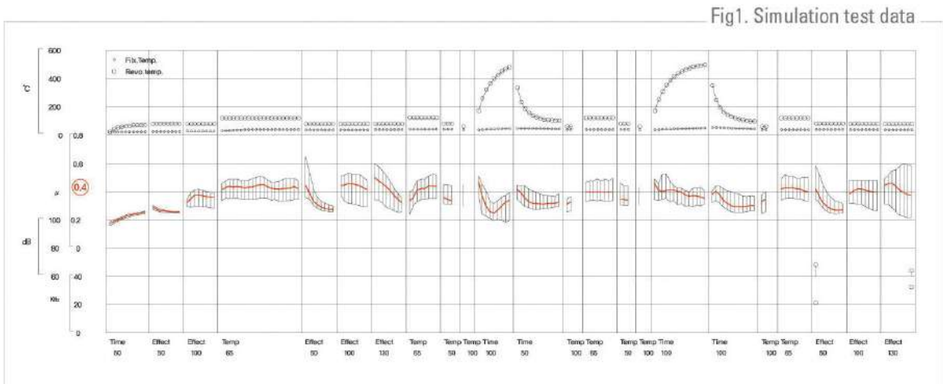

FRIXA, the most prominent brake parts manufacturer, producing value rather than products that provides both satisfaction in quality and care about the environments.

One-step-ahead science achieved by constant research and development is FRIXA's attraction.

FRIXA Core Technology

- We guarantee the accurate and safe braking system.
- We manufacture and provide the brake system of all kinds of cars from the passenger car to the light truck.
- The products of FRIXA have low noise in all vehicles.

Reduction in noise

You can drive comfortably with virtually little noises(below 70db). In general, braking noise not only gives a driver unpleasant feeling but also makes him(her) very tired. FRIXA minimizes noise, thus enabling you to drive comfortably.

Keeping wheel dust to a minimum

Use of metallic materials, a major cause of wheel dust, is kept to a minimum and advanced materials such Aramid fiber, K2O etc. are adopted as major materials to diminish wheel dust, thus keeping wheels clean.

Excellent braking power	FRIXA product's braking power is excellent, with average friction coefficient of 0.36-0.4μ. There could be braking deviation depending on variation of speed or temperature, but FRIXA products maintain stable braking power under various circumstances.
Reduced Noise	Almost no noise of FRIXA product under 70dB provides comfortable driving. Braking noise produces displeasure and intensifies physical fatigue of driver. FRIXA product minimizes the noise for comfortable driving.
Minimized Wheel Dust	Metallic series materials of major cause of the wheel dust is minimized with FRIXA products, and high grade materials of aramid fiber and titanic acid kalium instead is adopted for main materials, to reduce the wheel dust and maintain clean wheel condition.
Minimized Damage to Disc Rotor	Damage to the disc rotor by brake friction material causes driver's displeasure or disturbs stable braking function. FRIXA products have minimized this.
Excellent Safety at High Temperature	FRIXA product's excellent fade-resistance at repeated braking under high temperature enables safe driving at all times. (Fade: The phenomenon that braking function is impeded by decrease of friction coefficient at high temperature of the friction material) 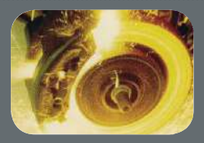
Environment friendly Products	FRIXA product's top priority is the environment and health, which do not have in the friction material ingredients the harmful heavy metals of Pb, Cd, Hg or Cr, neither the asbestos nor the glass fiber that may cause lung cancer if breathed in.
HIGH GRADE MATERIAL	**Titanic Acid Kalium** • Excellent heat resistance, insulation and abrasion resistance • Extended life span due to 3.5~4.0 times higher tensile strength than that of the normal material **Aramid Fiber** • High grade material of superior tensile strength and high elastic • Minimized wheel dust due to less adhesion to wheel of the abrasion dispersion.

Comparison of Wheel dust

FRIXA

Renders wheels clean by using advanced materials (wheel dust is kept to a minimum)

Others

Renders wheels contaminated by dust due to use of metallic materials such as steel fiber

Use of advanced materials

$K_2O\ 6TiO_2$

- Excellent in heat-resistance, insulation and durability
- Extended lifetime due to tensile strength strong 3.5-4 times

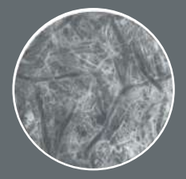

Aramid fiber

- Excellent in tensile strength and elasticity
- Wheel dust is kept to a minimum as only a little of worn dust is adhered to wheel surface.

Minimizes damage to disc rotor

Damage to disc rotor caused by brake friction material may give you unpleasant feeling while driving or a brake may not work in a properly stable condition. FRIXA minimizes damage to disc rotor.

FRIXA minimizes damage to disc rotor using less metallic materials

Metallic materials like steel fiber cause damage to disc rotor, thus generating harsh noise and making it difficult for you to drive safely. FRIXA improves the problem by using less metallic materials.

Superb High Temperature Stability

Despite repeated braking in overheated condition (high temperature), it is superb in anti-fade property, thus enabling you to drive safely.

※Fade : When friction material is overheated, its friction coefficient drops, thereby losing braking power.

Eco-friendly product

Heavy metals i. e. Pb, Cd, Hg, Cr, hazardous to the human body are not used in friction material (pad). Asbestos and glass fiber which, if inhaled, cause lung cancer are not used either.
FRIXA considers protection of environment and human health to be top priority.

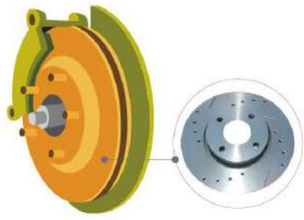

Premium edition

FRIXA S1

With more superb performance than that of original version.

FRIXA S1 is the choice of smart customers.
You will be extremely satisfied with its superb performance and reasonable price level.

Safe Driving! FRIXA S1 tells about essence of automotive brake.

In auto races requiring extreme braking performance, Frixa S1 is the only brake pad in Korea that competes with globally known brands of brakes.

- Nominated as official parts by 'CJ O Super Race'(the biggest auto race in Korea) for its main event of the Super 3800 Class(Genesis Coupe Race).
- Exclusively supplied to SPY-Motorsport, a the champion team of the 'Super light R300 Championship 2009' in United Kingdom.

FRIXA S1, where cutting edge racing technology is applied, keeps your safety under any circumstances by realizing high degree of braking control and stability at the same time.

- Average friction co-efficient exceeds 0.43μ(0.37μfor our previous version)

Successful Experience! FRIXA S1, New experience with eco-friendly driving.

Adopts NAO (Asbestos-free eco-friendly material) compound (??) technology which minimizes content of steel, the cause of brake noise, and dust and hard touch.
No longer brake noise harsh to your ears and sluggish reaction speed.
FRIXA S1 enables you to feel something smooth at the tip of your toes, reacting sensitively to what you are doing. It gives you pleasure of real driving.

Smart Choice! FRIXA S1 is a choice of smart customers.

You, insisting upon an original! You are entitled to be assured of safety by far better performance.
FRIXA S1, introduced at reasonable price level, serves your needs to your complete satisfaction with highest performance-to-price.

Premium edition

FRIXA S1

- We guarantee the accurate and safe braking system.
- We manufacture and provide the brake system of all kinds of cars from the passenger car to the light truck.
- The products of FRIXA have low noise in all vehicles.

Adoption of Double slot

It prevents dust from being stuck to slot or disc surface which causes braking control to be deteriorated. It also plays a role of lowering high temperature caused by friction.

Adoption of rubber coating shim

It prevents vibration and heat caused by friction from transmitting to caliper.
It reduces noise/ vibration and maintains stable braking power.

Back plate color

Applies luxurious silver color and texture.

Performance comparison table between premium products

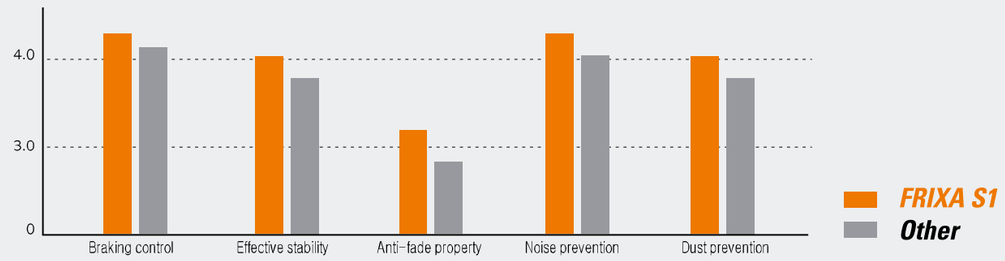

- The higher number in the chart, means higher value quality.

COMPETITION
Confidence in Perfect Control!
Slugout of 0.01 second!

FRIXA COMPETITION has been developed for car racers and speed mania. With the high function compound material of the ceramic fiber, it exercises strong braking capacity(high temperature braking power 0.30-0.45). The braking power and the stability also has been improved for the competition for 0.001 second, with minimized braking declination at high temperature and fade control at repeated braking.

Pad for expert racing, Blazing Red Color Back Plate, Strong Braking Power with Minimized Braking Declination at High Temperature, Fade Control at High Temperature and Repeated Braking(workable at ultra high temperature of 800°C), Application of Scorching Method. Increased Initial Bite.

Simulation Test Data

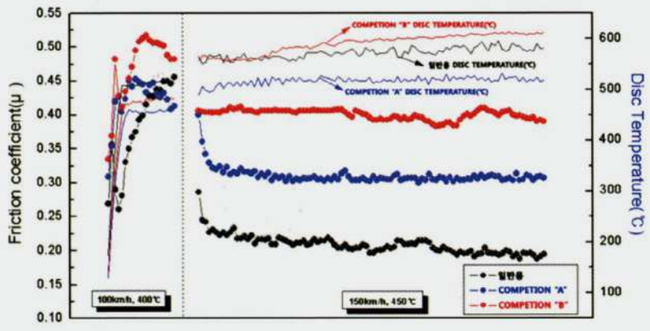

Products Characteristics Comparison

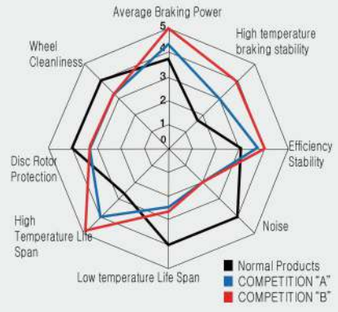

FRIXA COMPETITION

Core Technology

- *We guarantee the accurate and safe braking system.*
- *We manufacture and provide the brake system of all kinds of cars from the passenger car to the light truck.*
- *The products of FRIXA have low noise in all vehicles.*

Strong braking capacity for Racing

FRIXA COMPETITION is optimized for racing with the friction coefficient of 0.30-0.35μ level for COMPETITION"A" and the 0.38-0.45μ level for COMPETITION"B", while that of the normal pads under the racing is 0.25-0.15μ level.

Stability at High Temperature

When the average friction coefficient is high, braking declination occurs depending on the change of speed and braking temperature, but FRIXA COMPETITION maintains excellent braking stability and fade resistance in such changes.

Abrasion Resistance at High Temperature

Racing pad has to have abrasion resistance at high temperature, because it has to work frequently at high speed and high temperature. FRIXA COMPETITION is suitable for racing with its braking power anda stability as well as the abrasion resistance.
Usable Temperature Range: 300-800

Improved Adhesion Strength at High Temperature

High temperature is produced during racing from the speed reduction and braking at ultra high speed, and the friction material may separate from the back plate under the high temperature. For FRIXA COMPETITION, the strength reinforced back plate is developed by FRIXA's patent technology,to improve the adhesion strength and prevent such separation under high temperature.

Verified Performance

FRIXA COMPETITION is being used at Korea's most prominent professional racing competition of the CJ Super Race 3800 Class, 2000 Class and 1600 Class, receiving applausive responses from all the racers of the participating teams.

TAXI / S1 TAXI

Confidence in Perfect Control!

Safety insurance for the customers!
You are already a confident man.

Confidence in driving! The confidence may have some reasons. Find the answer with FRIXA.

With the FRIXA 'Taxi', the life span of the friction material is extended by about 40% than that of the normal products with the NAO series ingredients in the material, the wheels can be cleanly maintained all the time because the wheel defilement is reduced with the ingredients of the high-tech fiber of the kevlar and potassium titannate instead of the steel fiber, which is the main cause of such defilement by dusts from braking, and the disc rotor abrasion also is reduced.

Excellent braking·Reduced Noise·Minimized Disc Rotor

Abrasion·Environment friendly Products·Minimized Wheel Dust

FRIXA TAXI / S1 TAXI

FRIXA TAXI / S1 TAXI

Core Technology

- We guarantee the accurate and safe braking system.
- We manufacture and provide the brake system of all kinds of cars from the passenger car to the light truck.
- The products of FRIXA have low noise in all vehicles.

FRIXA Taxi

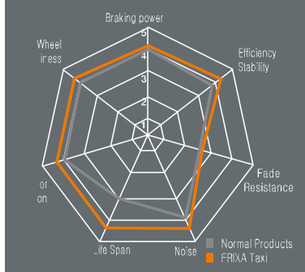

Excellent Braking

It has excellent braking efficiency, abrasion resistance and reduced noise, which is good for such vehicles that require abrasion resistance as those for commercial use. Average friction coefficient is 0.36-0.40μ level, and it allows stable braking performance even at the time of instant or repeated stops, because the braking declination is reduced.

Extension of Life Span

Its life span is about 40% longer than that of the normal products for passenger cars.

Reduced Noise

Braking noise produces displeasure and intensifies physical fatigue of driver. FRIXA product minimizes the noise for comfortable driving.

Minimized Damage to Disc Rotor

Generally, the product of improved abrasion resistance causes more damage to disc rotor, but FRIXA TAXI produces transition layer on its surface at the time of friction to minimize the damage to the disc rotor.

Environment Friendly Product

It protects pad replacement worker's health, because it does not have in the friction material the harmful heavy metals of Pb, Cd, Hg or Cr, neither the asbestos nor the glass fiber that may cause lung cancer if breathed in.

Minimized Wheel Dust

It produces only a little amount of wheel dust and keeps the wheels clean all the time.

FRIXA S1 Taxi

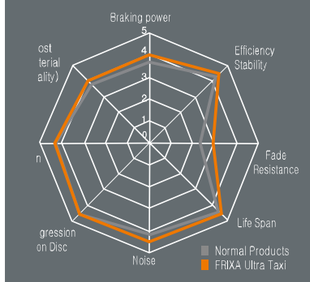

Extension of Life Span

Its life span is more than 100% longer than that of the normal pads for passenger cars.

Excellent Braking

Average friction coefficient is 0.36-0.40μlevel, which ensures stable braking performance even at the time of instant and repeated braking.

Comfortable Driving with Low Noise

Braking noise is minimized to allow comfortable driving.

Less Wheel Dust

Wheel dusts sticking to the wheel is minimized to keep the wheels clean all the time.

Minimized Damage to Disc Rotor

It produces film layer between the friction material and the disc, which reduces the damage to the disc rotor and abrasion of the pad.

LIGHT TRUCK

Confidence in Perfect Control!

So, you are safe!

FRIXA Light Truck has been developed with the top priority given on the driver's safety, to exercise stable braking power under such diverse operating conditions for the light trucks, as the different cargo loads or various road conditions, and to maintain constant braking performance at high temperature frequently produced by repeated braking.

Excellent braking Reduced Noise Least Damage to Disc Rotor

Environment-friendly Product Least Wheel Dust

TM FRIXA BRAKE SYSTEM

LIGHT TRUCK

FRIXA LIGHT TRUCK

Core Technology

- We guarantee the accurate and safe braking system.
- We manufacture and provide the brake system of all kinds of cars from the passenger car to the light truck.
- The products of FRIXA have low noise in all vehicles.

Excellent Braking

FRIXA LT is designed to minimize the brake slide phenomenon with the advanced high grade material to ensure stable braking power at high speed driving or the instant and repeated braking.

Minimized Noise

Braking noise produces displeasure and intensifies physical fatigue of the driver. FRIXA LT minimizes the noise and vibration for comfortable driving.

Extended Life Span

With the high grade material, the life span is extended to be 1.5 times of the normal pads.

Anti-Vibration Chamfer

The chamfer on each end of the lining reduces vibration to help comfortable driving.

Convenience

Wear limit line shows the lining replacement time.

Excellent Stability

The steel rivet strengthens the combination of the lining and the shoe to prevent the lining's escape from the shoe.

New Concept Brake Lining satisfying all the demands of braking power, Low Noise and Extended Life Span!

Simulation Test Data

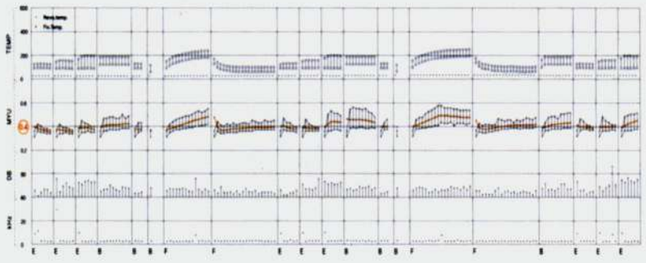

※ The smaller deviation between the highest and the lowest point of the red line means the better quality.

Products Characteristics Comparison

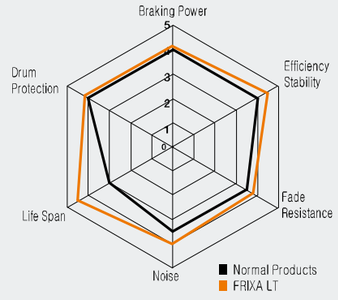

HEAVY-DUTY VEHICLE

Confidence in Perfect Control!

Take-off for Northeast Asian Logistics Hub!

For the take-off for Northeast Asian logistics hub, specialization of logistics and reduction of logistics cost is very important. With the high-tech materials, the life span of FRIXA Heavy Duty Vehicle is significantly extended. Logistics specialist choose FRIXA's Heavy-duty Vehicle FX lining. Besides the reduction of logistics cost, it ensures safe drive back home.

TM FRIXA BRAKE SYSTEM

HEAVY-DUTY VEHICLE

FRIXA HEAVY-DUTY VEHICLE

Core Technology

- We guarantee the accurate and safe braking system.
- We manufacture and provide the brake system of all kinds of cars from the passenger car to the light truck.
- The products of FRIXA have low noise in all vehicles.

Strong Braking Power for Heavy-duty Trucks

FRIXA HEAVY-DUTY VEHICLE's average friction coefficient(0.40-0.45μfor pad, 0.35-0.40μfor lining) is suitable for the characteristics of the heavy-duty tractors or the heavy-load dump trucks, demonstrating excellent braking power.

Fade Resistance at High Temperature

Its fade resistance is excellent, which means it maintains constant friction force under the high temperature caused inevitably by braking of the heavy trucks with weighty loads.

Stability at High Temperature

It maintains constant friction force and stability at high temperature, regardless of the velocity of the vehicle or the pressure on the brake pedal.

Extended Life Span

It assures superior life span to other products with the excellent heat resistance and fade resistance under the high temperature which frequently occurs to the heavy duty trucks.

Minimized Aggression on Counterpart

The friction compound's aggression on counterpart is minimized to protect the disc rotor and the drum and prevent noise at braking.

Simulation Test Data

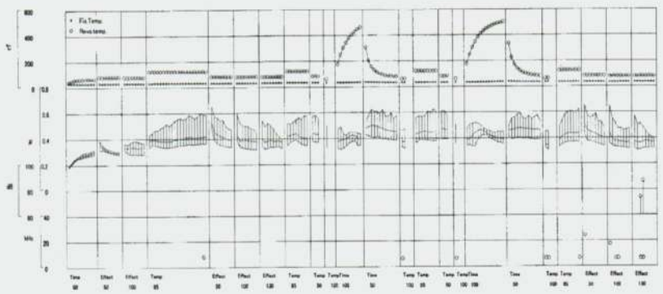

Products Characteristics Comparison

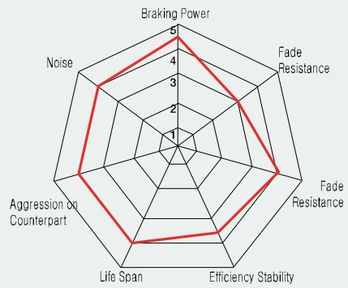

Brake Pads
for Scania / Benz / Volvo

Brake Pads
for Scania / Benz / Volvo

Through innovative management and high-tech strategy for the best quality

معلومات عن الشركة < تقديم الشركة

تجتهد شركة فوريكسا لجودة العالية من العميل بشركة قادرة على المنافسة عالميا مع أفضل جودة من خلال الإدارة المبتكرة والاستراتيجية التكنولوجية .

شركة فوريكسا إحدى شركة عائلية من شركة تايبو هانكوك المحدودة التي نمت بشركة عالمية مع الثقة والحب العملاء وقيادة من ثقافة السيارة ،وشاركت في معدات الفرامل السيارات ومجال قطع الغيار من معدات الفرامل للآلات الصناعية لتوسيع المجالات العمل الجديدة .

وتجتهد شركة فوريكسا لزيادة تحسين الآمانة العميل ومتعة القيادة ، ونمت بشركة متخصصة في الاحتكاك مع معترف من المحلية والخارجية بالتطور التقني المستمر وإدارة الجودة .

خاصة ، وقد أنتجت الدور القرص وسنادات الفرامل السباق باعتراف الزهور التقنية لقطع غيار السيارات وتطوير منتجات صديقة للبيئة للوقاية من التلوث ، فاعترفت المحلية والخارجية لهذه التكنولوجيا .

وقد تم كل هذا في مصلحة العملاء والتشجيع ونشكر بإخلاص ، وشركتنا هي الشركة التي تعتقد دائما الزبائن أولا ، وسوف تتجتهد بكثرة مع الحماس والتحدي الاستمرار .

شكرا .

لمحة عن الشرآة

نبذة عن تاريخ الشركة

زعيمة شركة فوريكسا للمنتجات المواد الاحتكاك المجموع

حققت شركة فوريكسا البحث والتطوير المستمر من أجل عولمة في التكنولوجيا الكوري ، وتقوم الجهود من شركة فوريكسا بمستمرة حتي اليوم لأفضل التكنولوجيا في العالم .

تأسست شرآة B&M هانتي في أغسطس 1991 ، وقد تتم دورة قيادية في تكنولوجيا المواد الاحتكاك في أوريا إلى المستوي العالم ، وتغيرت اسم الشرآة إلى شرآة فوريكسا في أبريل 2004 ، وتريد أن تقفز بمرة أخرى بقوة .

وتجتهد لانتاج المنتجات وتطويرها من خلال معهد للتكنولوجيا من شرآة تايبو هانكوك المحدودة في دايجون ومقرها في سون تشون ، و تبع بطريق شرآة هانكوك تايبو المحدودة .

حصلت على شهادة TS 16949 و ISO 9001 ، وقد ارتفعت النظام إلى خطوة أعلى ، وتصدر إلى العالم بهذه الفرصة .

وتكون المنتج "FRIXA" مراقبة لأمانة السيارة والسائق بأداء الكبح الممتاز والمقاومة للحرارة وقوة التحمل ، وتتم تكنولوجيا من الهادئ ومنع الغبار العجلة بزيادة أآثر في آرامة السائق

1991~1995

1. تأسيس شركة كومسان سوجاي المحدودة
2. حصل على جائزة رئاسية (مساهمة في التنمية الصناعية في البلاد بتوطين الآلية)
3. حصل على جائزة من وزير الصناعة (اختيار بأفضل المنتج التي عرضت مسحوق الحديد الانخفاض للمواد الاحتكاك في معرض المنتجات للدعم المشاريع المنشآت الصغيرة والمتوسطة بأول مرة .
4. اختيار بشركة الصغيرة والمتوسطة الواعدة لقيادة دولية (تحديد وفقا لأحكام المادة 6 من تركيب وتشغيل الصندوق لتنمية المشاريع الشركة الصغيرة والمتوسطة بإقليم جولا الجنوبي)
5. إنتاج الحديد المسحوق الانخفاض بطيار

1996~2000

1. خطة التطوير للمنتجات المصنعة من مواد الاحتكاك
2. بيع المنتجات المصنعة من مواد الاحتكاك بطيار
3. تغيير اسم الشركة (من موسانيوجاي إلى A&M هانتا)
4. حصل على براءات الاختراع (كوريا والولايات المتحدة واليابان والمانيا)
5. شهادة الموحدة الصناعية الكورية
6. شهادة علامة GQ (منتجات جيدة من الصغيرة والمتوسطة)
7. تشجيل العلامة التجارية (GRAMIX)

2001~2005

1. تأسيس قسم البحث والتطوير
2. شهادة ISO 9001 ، QS 9000
3. تغيير اسم الشركة (من B&M هانتا إلى فوريكسا)
4. إصدار منصات علاوة بأول
5. اختيار بأفضل منتجات جديدة في نصف الثاني من عام 2005 (جريدة هتنكوك)
6. شهادة ISO 9001 ، ISO /TS 16949
7. إصدار منصات الفرامل للسباقات بأول

حتي الآن ~2006

1. تعيين بشركة الصغيرة والمتوسطة لتصدير واعدة
2. توقيع الراعي الرسمي بمنصات الفرامل للسباقات من مهرجان السرعة (المنظمون KMRC)
3. تعيين بشركة الصغيرة والمتوسطة الواعدة
4. حصل على مارك E من شهادة اوروبية (813/547 01- 90R - E9)
5. إصدار الدوارات القرص للسباقات بأول
6. اختيار أجزاء الرسمية بمنصات الفرامل والقرص من SUPER RACE O CJ 2009 (المنظمون KGTCR)
7. تأسيس معهد الأبحاث والتطوير من شركة فوريكسا

FRIXA

Core Technology

تقديم المنتجات < التكنولوجيا الجوهر

لا يزال شركة فوريكسا قدمة بالبحث والتطوير المستمر .

فوريكسا هي شركة الزعيمة المنتجات المواد الاحتكاك المجموع ، أكثر ارتياحا مع المنتج خارج القيمة النظر عن البيئة والتعايش مجموع الاحتكاك المنتجات براض عن منتج ما وراء قيمة لرعاية البيئة .

الكبح ممتاز - المنتج ممتاز الكبح بمستوى 0.36 ~ 0.40μ في معامل الاحتكاك المتوسط . وتتحدث الانحراف من الكبح اعتمادا على تغيير في السرعة ، وتغييرات درجة الحرارة في شكل عام ، FRIXA هو منتج ممتاز مع الفرملة المستقرة في العديد من الحالات .

تخفيض الضوضاء – لا يكون أي ضجيج (أقل من 70dB) ، فيمكن أن تكون قيادة مريحة ، تؤدي الضجيج عند أثناء الكبح للسائق ويمكن إضافة إلى التعب . وتقوم FRIXA بتقليل الضجيج ويمكن للقيادة المريحة .

تقليل الغبار من العجلة - مع التقليل من استخدام المواد السلسلة المعدنية التي نسبب الغبار من العجلة ، وطورت بالمواد المتقدمة مثل الألياف الأراميد وتيتانات البوتاسيوم ($K_2O.\ 6TiO_2$)، فتقلل الغبار العجلة ويمكن أن تحتفظ العجلة بنظيفة دائما .

استخدام المواد المتقدمة

تيتانات البوتاسيوم ($K_2O.\ 6TiO_2$) – ممتاز المقاومة للحرارة ، ممتاز العزل الحراري ، ممتاز المقاومة للكشط / قوة الشد أقوي بـ 3.5-4 من المادة العامة ، فتمد الحياة .

لألياف الأراميد – ممتاز من قوة الشد ومعامل المرونة / يتمسك الغبار الكشط في السطح العجلة بقليل ، فتكون الوقوع من الغبار العجلة بقليلة .

تقليل الضرر في الدوار القرص – يمكن الضرر في الدوار القرص بسبب المواد الاحتكاك الفرامل أن تسبب عدم الراحة أثناء القيادة ، ولا تكون قادرة على القيام عند الفرملة . هذا FRIXA هو منتجج بتقليله .

ممتاز لدرجة الحرارة العالية - ممكن القيادة الآمانة بمقاومة الممتازة للفقدان الفرامل عند عدة الفرملة في درجة الحرارة العالية . (فقدان الفرامل : عندما تكون المواد الاحتكاك في درجة الحرارة العالية ويتم خفض المعامل الاحتكاك فيكون فقدان الكبح)

المنتجات الصديقة للبيئة – لا تستخدم المعادن الثقيلة التي تكون ضررة في الجسم من مكونات المواد الحتكاك مثل الكادميوم ، والزنبق ، والكروم ، ولا تستخدم الأسبست التي تسبب سرطان الرئة عند ستنشاقه والألياف الزجاجية ، فهذا المنتج يتعلق بالبيئة والصحة .

COMPETITION

FRIXA COMPETITION (كومبيوتيسون فوريكسا) هو منتج لعشاق الذي يتمتع بالسرعة والمنافسة السباقات . وتمارس أداء الكبح القوي باستخدام ألياف السيراميك الذي يكون المواد المركبة بأداء العالية (القوة الكبح في درجة الحرارة العالية μ 0.45 ~ (0.30 ، وتقلل فقدان الفرامل عند عدة الفرملة في درجة الحرارة العالية ، وتتم تعزيز الكبح والاستقرار في الوقع العملي أن تتعامل 0.001 ثانية .

منصة للسباقات الفنة الفنية ، تطبيق ببلايت أسود من سلسلة الأحمر القوى ، الكبح القوي وتقليل من اختلاف الفرامل في درجة الحرارة العالية / منع للفقدان الفرامل عند عدة الفرملة في درجة الحرارة العالية (ممكن استخدام في درجة الحرارة 800℃) ، تطبيق بأسلوب بسكوتشنج ، زيادة Initial Bite .

TAXI / ULTRA TAXI

تحسنت سيارات الأجرة فوريكسا في الحياة المواد من 40% مقارنة مع المنتجات العامة باستخدام مواد من سلسلة NAO ، وتقلل الألياف الفولاذية بسبب التلوث العجلة واستخدمت كبفلر والتيتانيوم البوتاسيوم من الألياف الأحدث . وتقلل التلوث العجلة بالغبار التي تولد عند الكبح المركبات فتكون أن تبقى العجلات بنظيفة دائما . وتقلل التأكل من الدوار القرص .

الكبح الممتاز ، تعزيز الجياة ، انخفاض لتوليد الضوضاء ، تقليل الضرر من الدوار القرص ، المنتجات الصديقة للبيئة ، تقليل الغبار من العجلة

LIGHT TRUCK

تتم البطانة المتوسطة فوريكسا الكبح المستقر بظروف القيادة المتنوعة من الشاحنات المتوسطة المتغيرة وفقا لظروف الطريق وحجم الشحن ، وقد تم تطور للحفاظ على الأداء المستمر دائما في نطاق درجة الحرارة العالية التي تولد عند الكبح التكرار بمتكررة ، لذلك هذا المنتج أولوية على آمانة للسائق .

الكبح الممتاز ، تمديد الحياة ، تقليل توليد الضوضاء ، تقليل الضرر في الدوار القرص

المنتج الصديقة للبيئة ، تقليل الغبار في العجلة

HEAVY-DUTY VEHICLE

تتطلب التخصص في مجال الخدمات اللوجستية وخفض تكاليف الخدمات اللوجستية لقفزة إلى محور اللوجستية في شمال شرق آسيا . وقد تم تمديد العمر باستخدام المواد المتقدمة بشكل كبير . ويختار سائقون المحترفين في اللوجستية بطانة FX للسيارات التجارية الكبيرة التي صنعت شركة فوريكسا المتخصصة بمواد الاختكاك . وخفض تكاليف الخدمات اللوجستية وكذلك ضمان لعودتهم الآمنة .

1. تطبيق فتحة مزدوجة - يمنع انخفاض القوة الكبح بتمسك الغبار في جانب القرص أو سطح الاحتكاك ، وتقلل درجة الحرارة العالية بسبب الاحتكاك .

2. تطبيق شيم الطلاء المطاط المتقدم - يمنع انتقال الاهتزاز الناتجة عن الاحتكاك ودرجة الحرارة العالية إلى المسماك ، ويحتفظ أداء الكبح الاستقرار وانخفاض الضوضاء / الاهتزاز.

3. تطبيق بالملمس واللون الفضة الفاخرة (لون اللوحة العودة)

البيانات المقارنة بجودة المنتجات البوريميوم

الكبح

استقرار التأثير

مقاومة للفقدان الفرامل

الوقاية من الضجيج

منع الغبار

يشير غلى منتجات بعالية الأداء عندما تكون ارتفاع عدد كل بذد من بذود.

شركة A

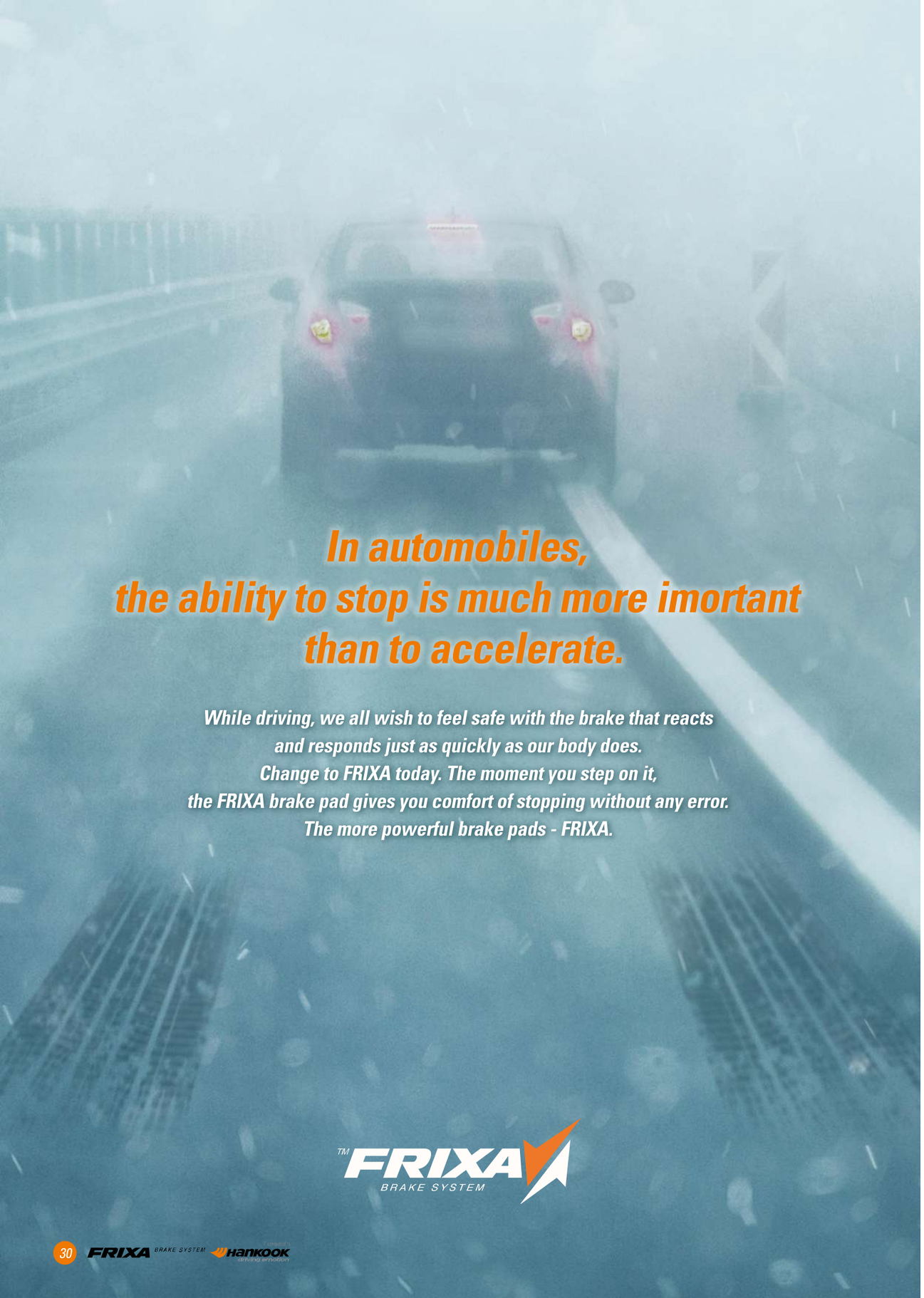

In automobiles, the ability to stop is much more imortant than to accelerate.

While driving, we all wish to feel safe with the brake that reacts and responds just as quickly as our body does. Change to FRIXA today. The moment you step on it, the FRIXA brake pad gives you comfort of stopping without any error. The more powerful brake pads - FRIXA.

30 FRIXA BRAKE SYSTEM Hankook driving emotion

Distributed by Hankook driving emotion

FRIXA BRAKE SYSTEM PRODUCT LIST

KOREAN VEHICLES	P 30 ~
FOREIGN VEHICLES (PAD)	P 49 ~
FOREIGN VEHICLES (LINING)	P 69 ~

FRIXA CODE	POSITION	MAKER	REPRESENTATIVE MODEL	INTERCHANGEABLE	PARTS NO.		SP NO.	HP NO.	FMSI NO.	WVA NO.	TRW	E-MARK (E90)
FLD01	REAR (SHOE ASS'Y)	CHEVROLET	TICO	TICO R(91.~00.09) MATIZ(SPARK) R(98.~09.08)	53200 70800 000 53200 70810 000 53201 70B00 000 53201 70B10 000	96268686 96446178	SA086 (SA050)	HS2001 HS2002			GS8645 GS8646	
FLD02	REAR (SHOE ASS'Y)	CHEVROLET	PRINCE	PRINCE(92.~97.) ROYAL PRINCE(~92.) BROUGHAM(93.~97.)	S4520001 S4520002	1605594 1605591 1605690 1605734 1605772 1605887 90187499 90273263 90297670	SA010	HS2006				
FLD03	REAR (SHOE ASS'Y)	CHEVROLET	LEMANS	LEMANS(86.~97.) ESPERO(OLD)(90.10~94.)	90272780	90129794 90129795	SA055-OLD	HS2004				
FLD04	REAR (SHOE ASS'Y)	CHEVROLET	ESPERO(NEW)	ESPERO(NEW)(94.~96.12) CIERO(94.~97.) NEXIA(95.~97.) LANOS(96.~03.) NUBIRA I/II(97.~03.)	96226110 96241979 96241980 96300315 96300316 96430417	1605812 NP1441 NP1464 S4520003 S4520005 S4520006	SA055-NEW	HS2005				○
FLD07	REAR (SHOE ASS'Y)	CHEVROLET	DAMAS	DAMAS, DAMAS II(92.~) LABO(92.~02.)		53200 85800 000	SA059	HS2003				
FLD08	REAR (SHOE ASS'Y)	CHEVROLET	LEGANZA	LEGANZA R(97.04~02.04) NUBIRA DOHC R(97.~99.)	96245180 96253300		SA102	HS2007			GS8748	
FLD09	REAR (SHOE ASS'Y)	CHEVROLET	REZZO(TACOMA)	REZZO(TACOMA)(00.01~07.02)	96349066 96394977		SA103	HS2008				
FLD10	REAR (SHOE ASS'Y)	CHEVROLET	KALOS(AVEO)	KALOS(AVEO) R(02.05~05.08) MATIZ(SPARK) CREATIVE R(09.09~11.02) SPARK R(09.09~) GENTRA R(05.09~10.05)	93740251 93740252 93740525 S4520007 S4520008	96473229 94564513	SA129	HS2009				○
FLD11	REAR (SHOE ASS'Y)	CHEVROLET	MAGNUS(EVANDA)	MAGNUS(EVANDA)(99.12~02.02)	P96446745		SA119					
FLD11-1	PARKING BRAKE SHOE	CHEVROLET	LACETTI	MAGNUS(EVANDA) R	96496764							
FLH01	REAR (SHOE ASS'Y)	HYUNDAI	AVANTE(ELANTRA)	AVANTE(ELANTRA) R(95.03~00.04) AVANTE(ELANTRA) XD R(00.03~04.04) NEW AVANTE(ELANTRA) XD R(04.05~06.05) AVANTE(ELANTRA) 06MY R(06.06~10.07) VERNA(ACCENT)(NEW) R(02.08~05.07) ELANTRA R(88.02~94.07) TIBURON R(96.04~01.08)	58305 17A00 58305 29A10	58305 2DA10 58350 2FA00 58305 25A10	SA062	HS0002 HS0004			GS8678	○
FLH012	REAR (SHOE ASS'Y)	HYUNDAI	EXCEL	EXCEL(85.02~94.07) SCOUPE(90.02~95.02) VERNA(ACCENT)(OLD)(99.06~02.07) ACCENT (LC) (00~02)	58305 24000 58305 24020 58305 24A00 58305 24A20 58305 24A30 58305 25A00		SA046	HS0001				○

FRIXA CODE	POSITION	MAKER	REPRESENTATIVE MODEL	INTERCHANGEABLE	PARTS NO.		SP NO.	HP NO.	FMSI NO.	WVA NO.	TRW	E-MARK (E90)
FLH013	REAR (SHOE ASS'Y)	HYUNDAI	ACCENT	ACCENT(94.04~99.10)	58305 22A00 58305 22A01		SA047	HS0003				○
FLH02	REAR (SHOE ASS'Y)	HYUNDAI	SONATA	SONATA I/II/III(88.06~98.04) STELLAR(83.07~97.01) SANTAMO(96.01~02.12) CARSTA(99.05~03.03)	58305 34A10 58305 33A00	58305-M2000 58305-M3A00	SA048	HS0005 HS0006			GS6152	
FLH02F	REAR (SHOE ASS'Y)	HYUNDAI	EF SONATA	EF SONATA(98.04~04.08) LAVITA(00.04~02.03) SANTAMO PLUS(96.01~02.12) OPTIMA(98.06~05.10)	58305 38A00 58305 3CA00		SA111	HS0007				
FLH06	REAR (SHOE ASS'Y)	HYUNDAI	NEW GRACE(H100)	NEW GRACE(H100) R(94.05~03.12) GALLOPER R(99.01~02.01) MUSSO R(02.03~08.08) ISTANA R(95.~03.06) NEW KORANDO R(96.07~05.12) REXTON(OLD/NEW) R(01.~) KYRON R(05.06~11.12) ACTYON R(05.10~10.12) KORANDO FAMILY R(88.10~95.10)	58305 44A00 58305 44A10 58305 44A40	48330 05000 6614203019 58315 44020S	SA072-GR	HS0012			GS8155 GS6181 GS8564	○
FLH07	REAR (SHOE ASS'Y)	HYUNDAI	PORTER	PORTER(96.03~03.12)	58305 4BA00 58315 44000S 58325 44000		SA072-PO	HS0011				
FLH09	REAR (SHOE ASS'Y)	HYUNDAI	STAREX(H1)	STAREX(H1)(97.03~02.09) GALLOPER II(02.01~03.12)	58305 4AA00 58305 M2A10 MB950065 SB000102		SA099	HS0009			GS8696	○
FLH10	REAR (SHOE ASS'Y)	HYUNDAI	ATOZ(SANTRO)	ATOZ(SANTRO)(97.09~02.12) VISTO(98.02~04.01)	58305 02500 58305 02A00 58305 02A10		SA096	HS0008			GS8659	
FLH11	REAR (SHOE ASS'Y)	HYUNDAI	LIBERO	LIBERO(97.03~03.11)	58305 47A00		SA100	HS0013				
FLH12	REAR (SHOE ASS'Y)	HYUNDAI	CLICK(GETZ)	CLICK(GETZ)(02.05~07.05)	58305 1CA00		SA132				GS8737	○
FLH13	REAR (SHOE ASS'Y)	HYUNDAI	STAREX(H1) NEW	STAREX(NEW)(02.12~07.05)	58305 4AA20 58305 4AA30		SA130	HS0010	S1003		GS8774	○
FLH14	REAR (SHOE ASS'Y)	HYUNDAI	PORTER II(LOW DECK)	PORTER II(LOW DECK)(04.01~) BONGO III(LOW DECK)(04.01~)	58305 4FA01	58350-4EA00	SA135				GS8428	
FLH16	REAR (SHOE ASS'Y)	HYUNDAI	PORTER(HIGH DECK)		58305 4BA20		SA140					
FLH17	REAR (SHOE ASS'Y)	HYUNDAI	GRAND STAREX(H1)	GRAND STAREX(H1)(07.05~)	58305 4HA00		SA141					
FLK01	REAR (SHOE ASS'Y)	KIA	PRIDE	PRIDE/BETA(86.~99.)	KK150 26310 KK150 2638Z KK150 2638ZA		SA049	HS1001			GS8519	○
FLK02	REAR (SHOE ASS'Y)	KIA	CONCORD	CONCORD(87.~96.01) CAPITAL(89.~96.01)	0K917 2638Z		SA052					
FLKT02	REAR (SHOE ASS'Y)	KIA	CONCORD for Taxi	CONCORD(87.~96.01) SEPIA TOWNER	0K201 26 38Z 0K2N1 26 38Z 0K900 26 38Z AA100 26 310		SA051					
FLK03	REAR (SHOE ASS'Y)	KIA	SEPHIA	SEPHIA(NEW)/II(97.03~00.06) SPECTRA(01.02~03.07) SHUMA(97.03~99.)	0K23N 2638Z		SA053	HS1006			GS8692	○

FRIXA CODE	POSITION	MAKER	REPRESENTATIVE MODEL	INTERCHANGEABLE	PARTS NO.		SP NO.	HP NO.	FMSI NO.	WVA NO.	TRW	E-MARK (E90)
FLK04	REAR (SHOE ASS'Y)	KIA	CARENS(RONDO)	CREDOS I/II(95.03~00.07) CARENS(RONDO) I/II(99.06~06.03)	0K2FA 2638Z 0K9A0 2623Z 0K9A6 2623Z	0K2N1-26-28Z	SA079	HS1007				
FLK07	REAR (SHOE ASS'Y)	KIA	SPORTAGE	SPORTAGE(93.06~99.02)	0K011 2638Z 0K0Y1 2638Z		SA070	HS1008				
FLK08	REAR (SHOE ASS'Y)	KIA	BESTA	BESTA(87.07~97.04) TOPIC(87.~91.) BONGO(NEW)(94.~94.04) PORTER II(HIGH DECK)(04.01~) BONGO III(HIGH DECK)(04.01~) BONGO III VAN(12SEAT)(04.01~) BONGO III 1.4TON(04.01~)	0K70Y 2638Z 0K710 2638Z K0BL12638Z	0K71E2638Z	SA044	HS1011			GS8523	○
FLK082	REAR (SHOE ASS'Y)	KIA	WIDE BONGO	WIDE BONGO(94.01~97.06) FRONTIER1.3TON(NEW)(01.~03.12) FRONTIER1.4TON(NEW)(01.~03.12)	0K71F 3328Z 0K756 2638Z 0K756 2638ZA 44060 HC625 S02A26310A S02A49380 S08526310 S08526330 S08549380 S0YA2638Z		SA045	HS1010			GS8428	
FLK10	REAR (SHOE ASS'Y)	KIA	PREGIO	PREGIO(95.10~98.05)	0K72A 2638Z		SA044	HS1011				○
FLK10N	REAR (SHOE ASS'Y)	KIA	PREGIO GRAND	NEW PREGIO(98.06~03.02) BONGO III VAN(15SEAT)(04.01~)	0K79A 2638Z		SA127	HS1013				○
FLK13	REAR (SHOE ASS'Y)	KIA	CARNIVAL(SEDONA)	CARNIVAL(SEDONA)(98.01~99.01) TRAJET XG(99.12~01.08)	0K552 2638Z K0BJ1 2638Z		SA112	HS1012	S714-1485ATT		GS8643	
FLK13N	REAR (SHOE ASS'Y)	KIA	CARNIVAL(SEDONA) (NEW)	CARNIVAL(SEDONA) II(99.01~03.12) TRAJET XG(01.09~03.12)	0K56A 2638Z 0K56A 2638ZA 0K58A 2638Z 58305 3AA00	5830526A10 5830526A00	SA020	HS1014			GS8441	
FLK14	REAR (SHOE ASS'Y)	KIA	CERES	CERES(83.~94.) BONGO(OLD)(~94.)	01823 2638Z 01823 26310B		SA015				GS8120	
FLK14N	REAR (SHOE ASS'Y)	KIA	CERES(NEW)	CERES(NEW)(94.~96.)	0K68A 3328Z		SA019					
FLK15	REAR (SHOE ASS'Y)	KIA	RIO	RIO(99.11~02.05)	0K30A 2628Z		SA137	HS1002				
FLK15N	REAR (SHOE ASS'Y)	KIA	RIO SF	RIO SF(02.06~05.04)	0K30B 2628Z 58315 FDA00 58315 FDA01		SA134	HS1003				
FLK16	REAR (SHOE ASS'Y)	KIA	ROCSTA R2	ROCSTA R2(92.~97.) SPORTAGE GRAND(00.~02.) RETONA(00.~02.)	0K045 2638Z AA301 26310		SA018				GS8682	
FLK17	REAR (SHOE ASS'Y)	KIA	FRONTIER1.3	FRONTIER1.3TON(OLD)(99.06~01.) FRONTIER1.4TON(OLD)(99.06~01.)	K611 2638Z							
FLK18	REAR (SHOE ASS'Y)	KIA	PRIDE(NEW)	PRIDE 05MY(NEW RIO) (05.08~11.10) VERNA(ACCENT) 05MY(05.08~10.12)	58305 1GA00		SA153		S910-1616		GS8766	○
FLK19	REAR (SHOE ASS'Y)	KIA	MORNING(PICANTO)	MORNING(PICANTO)(04.01~)	58350 07A00		SA154				GS8754	○

FRIXA CODE	POSITION	MAKER	REPRESENTATIVE MODEL	INTERCHANGEABLE	PARTS NO.		SP NO.	HP NO.	FMSI NO.	WVA NO.	TRW	E-MARK (E90)
FLK20	REAR (SHOE ASS'Y)	KIA	FORTE	FORTE(08.08~)	58350 1MA00		SA155					
FLK21	REAR (SHOE ASS'Y)	KIA	SOUL	SOUL	58350 2KA00							
FLK22	REAR (SHOE ASS'Y)	KIA	PICANTO 11MY R	PICANTO 11MY (11.02~)	58350 1YA00		SA156					
FLK23 (FLE18)	REAR (SHOE ASS'Y)	KIA	ALL NEW PRIDE	ALL NEW PRIDE	58305 3XA00 58305 B4A70 58305 1CA10		SA133				GS8785	
FLS01	REAR (SHOE ASS'Y)	RENAULT SAMSUNG	SM-3	SM-3(02.~)	48430 31011K0		SA131					
FPD01	FRONT (PAD)	CHEVROLET	TICO	TICO(91.~00.09)	4BP3659 08264 52210 70B00 000 55200 61880 55201 78810 000 55201 78820 000 55210 50E20 55200 50850		SP1050	HP2001		23061	GDB3108	
FPD02	FRONT (PAD)	CHEVROLET	LEMANS	LEMANS(86.~97.) ROYALE PRINCE(~92.) BROUGHAM(93.~95.)	96101972S 9613 3030S		SP1055	HP2003	D378-7267	20939 21057	GDB199 GDB7519	○
FPD03	FRONT (PAD)	CHEVROLET	ESPERO1.5	ESPERO1.5 (90.10~96.12) CIELO(94.~97.) NEXIA(95.~97.)	96133555S		SP1055	HP2003	D378-7267	20939 21057	GDB199 GDB7519	
FPD05	FRONT (PAD)	CHEVROLET	ESPERO2.0	ESPERO2.0(TEVESE) PRINCE(TEVESE)	11046952012 11046152 S4512001 S4512002		SP1078	HP2004	D796-7666	21190 21201	GDB951	
FPD06	FRONT (PAD)	CHEVROLET	NEW PRINCE	NEW PRINCE(92.~97.) LANOS DOHC(96.~03.) BROUGHAM(NEW)(95.~97.) NUBIRA ESPERO CIELO	96281937 S4510001 S4510005 S4510009 S4510011 S4510014 S4511001 S4511004 S4511006		SP1077	HP2005			GDB3265	
FPD07	FRONT (PAD)	CHEVROLET	DAMAS	DAMAS(92.~03.08) DAMAS II(03.09~) LABO(92.~02.)	45022 SA0999HE 45022 SA0N50 45022 SA0N51 55104 80600000 55104 80800000 55104 80810000 55200 56850 55200 56851 55200 60B50 55200 70820 55200 70860 45022 SA0670	55200 70861 55200 70862 55210 56A50 55210 70820 55210 78460 91144333 GBP90264 GBP90269 55210 78450 55210 85000 55210 85200 55210 M84500	SP1059	HP2013	D177-7104 7104-D281	20731	GDB254 GDB1038	
FPD08	FRONT (PAD)	CHEVROLET	LEGANZA	LEGANZA(97.12~02.04) NUBIRA DOHC(97.~99.) NUBIRA II(99.~03.)	S4510009N	96245178 96253367 96253382 96253383	SP1102	HP2006	D797-7668	23234 23235 23236	GDB3216	○
FPD08R	REAR (PAD)	CHEVROLET	LEGANZA R	LEGANZA(97.~03.) NUBIRA(97.~03.)	96245179 96253368 96391892 AW346513 S4521001 S5421002 S4521006		SP1114	HP2007	D724-7591 D724-7669	23237	GDB3172 GDB7527	○

FRIXA CODE	POSITION	MAKER	REPRESENTATIVE MODEL	INTERCHANGEABLE	PARTS NO.		SP NO.	HP NO.	FMSI NO.	WVA NO.	TRW	E-MARK (E90)
FPD09	FRONT (PAD)	CHEVROLET	MATIZ(SPARK)	LANOS SOHC(96.~03.) MATIZ(SPARK) I/II/III(98.~09.08)	96281945 96288629 96316582 96446176 S4510004 S4510017	96273708	SP1086	HP2002	8433-D1321	23241	GDB3195	○
FPD10	FRONT (PAD)	CHEVROLET	MAGNUS(EVANDA)	MAGNUS(EVANDA)(99.12~02.02) MAGNUS(EVANDA) L6 2.0(02.03~06.01) REZZO(TACOMA)(00.01~07.02)	96349059 96349060 96446742 96446744 96446762 96495164 96495227 96496765		SP1103	HP2008		24062 24063 24064	GDB3345	
FPD10R	REAR (PAD)	CHEVROLET	MAGNUS(EVANDA) R	MAGNUS(EVANDA) R(99.12~06.01) TOSCA(EPICA) R(06.02~10.12) EPICA R(11.03~)	55500 86Z00 96475028 96446744		SP1119-R	HP2009	D1030-7935	23994	GDB3346	
FPD12	FRONT (PAD)	CHEVROLET	LACETTI(OPTRA)	LACETTI(OPTRA)(02.11~) GENTRA X(14")(07.10~10.05)	96405129 96405130 96449288 96534655 55200-85Z0		SP1159	HP2012	D902-7779 D1035-7779	23234 23235 23236	GDB3171	○
FPD12NR	REAR (PAD)	CHEVROLET	LACETTI(OPTRA) 06MY R	LACETTI(OPTRA) 06MY(06.05~10.11)	55500 85Z10 96800089		SP1257		D1315-7939			○
FPD12R	REAR (PAD)	CHEVROLET	LACETTI(OPTRA) R	LACETTI(OPTRA)(02.11~06.04)	55500 85Z00 96405131		SP1160	HP1024	D1036-7939	24071	GDB3348	○
FPD13	FRONT (PAD)	CHEVROLET	KALOS(AVEO)	KALOS(AVEO)(02.05~05.08) GENTRA(05.09~10.05) GENTRA X(13")(07.10~10.05) NUBIRA SOCH(97.02~02.10)	94566892 96534653		SP1158	HP2011	D1269-8385	23974	GDB3330	○
FPD(T)14	FRONT (PAD)	CHEVROLET	TOSCA(EPICA)	TOSCA(EPICA)(06.02~10.12) MAGNUS(EVANDA) L6 2.5(02.12~06.01) EPICA(11.03~)	96475026 96475027 96952179		SP1193		D1031-7936			
FPD15	FRONT (PAD)	CHEVROLET	ARCADIA	ARCADIA(94.02~99.)	45022 S10A00 45022 S10A02 45022 S10G00 45022 S10G01 45022 S10G02 45022 S30A00 45022 S30A02 45022 S30A50 45022 SA1AE20 45022 SL0600 45022 SL0G00 45022 SL0G01 45022 SL0G02 45022 SLRG01	45022 SLRG02 45022 SM5A00 45022 SN7G50 45022 SP0E00 45022 SS0G00 45022 SS0G01 45022 SS0G02 45022 ST7R00 45022 ST7R01 96329471 GBP90329	SP1076-F	HP2010	D503-7382	21651 21652 21653	GDB995 GDB1062 GDB3177 GDB3188 GDB3196	
FPD16	FRONT (PAD)	CHEVROLET	WINSTORM(CAPTIVA)	WINSTORM(CAPTIVA)(06.06~10.12) CAPTIVA(11.03~)	20789468 96626069 D966226070	22850989 4808861 4810774 95459512 96626070	SP1204		D1678-8907	24510 24511 24512	GDB1715	
FPD16R	REAR (PAD)	CHEVROLET	WINSTORM (CAPTIVA) R	WINSTORM(CAPTIVA)(06.06~10.12) CAPTIVA(11.03~)	19149904 96626075 96626076 D966226076	22850988 1605123 4819239 95459513	SP1205		D1275-8391	24498 24499 24500	GDB1716	
FPD17	FRONT (PAD)	CHEVROLET	LACETTI PREMIERE(CRUZE)	LACETTI PREMIERE GASOLINE(08.12~) CRUZE(11.03~) AVEO 15"(11.03~)	13301207 13301208 13356286	13374966 13412272 542120 95516191 13412807	SP1362		D1522-8730	25076 25077 25078		○

FRIXA CODE	POSITION	MAKER	REPRESENTATIVE MODEL	INTERCHANGEABLE	PARTS NO.		SP NO.	HP NO.	FMSI NO.	WVA NO.	TRW	E-MARK (E90)
FPD17R	REAR (PAD)	CHEVROLET	LACETTI PREMIERE(CRUZE) R	LACETTI PREMIERE(CRUZE)(08.12~) ORLANDO(11.03~) TRAX(13.02~) CRUZE(11.03~)	13300867 13300868	13319294 13404405 13411380 13411383 95516192 13319293 13417473 13473427 1605140 1605170 1605176 1605180 1605294 542039 542040 13310867	SP1363		D1468-8668	25096	GDB1844	○
FPD18	FRONT (PAD)	CHEVROLET	SPARK	SPARK(11.03~) MATIZ(SPARK) CREATIVE(09.09~11.02)	P94564512 96682858		SP1392		D1590-8801	25268 25269 25270		○
FPD19	FRONT (PAD)	CHEVROLET	ALPHEON	ALPHEON(10.09~) MALIBU(11.10~)	13237753	13312895 13237750 1605524 22959105 20963796	SP1402		D1421-8536	24415 24416 24417		
FPD19R	REAR (PAD)	CHEVROLET	ALPHEON R	ALPHEON R(10.09~) MALIBU R(11.10~) IMPALA R(15.09~)	13237768 22846359	22846361 1605366	SP2135		D1430-8547	24421 24422		
FPD20	FRONT (PAD)	CHEVROLET	ORLANDO	ORLANDO(11.02~) LACETTI PREMIERE DISEL(08.12~) TRAX(13.02~)	13301234 13412809 13412810	22279077 13301235	SP1480		D1467-8667	25079 25080 25081		○
FPD21	FRONT (PAD)	CHEVROLET	AVEO 14MY		95025848 95231011 95231012		SP1481		D1702-8926			○
FPD22	FRONT (PAD)	CHEVROLET	THE NEXT SPARK 14"		42349237		SP1836					
FPD23	FRONT (PAD)	CHEVROLET	THE NEXT SPARK 15"		42349238		SP1837		D1864-9093			
FPD24	FRONT (PAD)	CHEVROLET	ALL NEW MALIBU		23326280		SP1981		D1913-9144			
FPD24R	REAR (PAD)	CHEVROLET	ALL NEW MALIBU		13595651		SP1929					
FPH01	FRONT (PAD)	HYUNDAI	AVANTE(ELANTRA)	AVANTE(ELANTRA)(95.03~00.04) ELANTRA(88.02~94.07) EXCEL(85.02~94.07) ACCENT(94.04~99.10) STELLAR(83.07~97.01) SCOUPE(90.02~95.05) CLICK(GETZ)(02.05~07.05) VERNA(ACCENT)(99.06~05.07)	58101 1CA00 58101 1CA10 58101 22A00 58101 22A10 58101 23A00 58101 24A00 58101 24B00 58101 24C00 58101 25A00 58101 25A10	58101 28A10 58101 32300 58101 32310 58101 32A00 58101 32B00 58115 24150	SP1047	HP0004	D404-7293 D440-7293 D497-7376	21012 21773 21774	GDB3331 GDB373 GDB893	○
FPH01R	REAR (PAD)	HYUNDAI	AVANTE(ELANTRA) R	ELANTRA R(88.02~94.07) TIBURON,TURBULENCE R(96.04~01.08) TUSCANI(COUPE)2.0/2.7 R(01.09~08.07) AVANTE(ELANTRA) R(95.03~00.04) AVANTE(ELANTRA) XD 1.5 R(00.03~04.04) NEW AVANTE(ELANTRA) XD 1.6 R (03.05~06.09) CERATO(FORTE) R(03.10~05.02)	44060 08E91 44060 61E90 44060 61E94 44060 65E90 44060 86E90 44060 90E90 44060 D3591 4406061E91 44060D3591	58302 28A00 58302 28A01 58302 29A00 58302 29A10 58302 2DA00 58302 2DA10 58302 2FA00 58302 2FA10 DD06061E25 58215 291S0	SP1062	HP0021	D323-7146 D323-7283 D429-7146 D464-7344	21553 21554 21555	GDB1010 GDB1450 GDB3170 GDB3368	○

FRIXA CODE	POSITION	MAKER	REPRESENTATIVE MODEL	INTERCHANGEABLE	PARTS NO.		SP NO.	HP NO.	FMSI NO.	WVA NO.	TRW	E-MARK (E90)
FPH02	FRONT (PAD)	HYUNDAI	SONATA	SONATA(88.06~93.04) SONATA II(93.05~96.02) MARCIA(95.03~97.10) ELANTRA1.6/1.8(88.02~94.07) AVANTE(ELANTRA) TOURING(95.03~00.04) TIBURON,TURBULENCE(96.04~01.08)	58101 28A00 58101 28A20 58101 29A00 58101 29A10 58101 29A20 58101 29A30 58101 29A40 58101 29A80 58101 29B10	58101 33A00 58101 33C00 58101 35A10 58101 38A50 58101 38A60 41060 32R94 58115 330S0	SP1048	HP0003	D462-8314 D747-7329		GDB3101 GDB3169 GDB3211 GDB3256 GDB3283 GDB3365 GDB7521 GDB895	
FPH02F	FRONT (PAD)	HYUNDAI	EF SONATA	EF SONATA(98.04~00.12) NEW EF SONATA(01.01~03.08) OPTIMA1.8/2.0(98.06~02.08) GRANDEUR(AZERA) XG 2.0(98.09~05.11) NEW AVANTE(ELANTRA) XD 2.0 (04.04~06.05) LAVITA(00.04~02.03)	58101 17A00 58101 29A70 58101 29A90 58101 2DA20 58101 34A10 58101 38A10	58101 38A30 58101 38A40 58101 38A70 58101 3CA20 58101 3CA80 58101 M2A02 58101 M2A04	SP1111	HP0007	D449-7329, D462-7342 D469-7349, D485-7342 D700-7329, D747-7329 D887-7765	21725 21726 21727	GDB3101 GDB3169 GDB3211 GDB3256 GDB3283 GDB3365 GDB7521 GDB895	
FPH02NF	FRONT (PAD)	HYUNDAI	NF SONATA	NF SONATA 2.0 (04.09~07.09) NF TRANSFORM 2.0 (07.10~) NEW EF SONATA(03.09~04.08) OPTIMA REGAL(02.09~05.10) LOTZE 1.8/2.0(05.11~07.11) LOTZE INNOVATION 1.8/2.0 (07.12~10.04) TUSCANI(COUPE) 2.0(01.09~08.07) SOUL(08.09~13.09)	58101 1FA00 58101 1FE00 58101 2CA10 58101 2CA11 58101 2CA20 58101 2EA01 58101 2EA10 58101 2EA11 58101 2EA20 58101 3KA00	58101 2KA10 58101 38A81 58101 38A90 58101 3CA70 58101 3KA01 58101 3KA40 58101 3KA61 58101 2GA01 58101 2GB00 58101 2KA51	SP1155	HP0009	8306-D1125 D924-7825 D924-7990 D924-8232	23891 23892 23893	GDB3352 GDB3386 GDB3409	
FPH02NR	REAR (PAD)	HYUNDAI	SONATA R	SONATA II/III(93.06~98.03) MARCIA(95.03~98.05)	43022 SD4000 43022 SD4010 43022 SD4020 43022 SG9000 58215 341S0 58302 34A00 GBP90300 GBP90304		SP1074	HP0005	D342-7236 D1262-7236	20029 20078 20079	GDB994	
FPH02S	FRONT (PAD)	HYUNDAI	SONATA III	SONATA III, return spring type(93.03~98.03) MARCIA(97.10~98.05)	58101 34A21	58101 29A50 58101 34A20	SP1048	HP0006	D700-7329	21725 21726 21727	GDB3101 GDB3169 GDB3211 GDB3256 GDB3283 GDB3365 GDB7521 GDB895	
FPH04	FRONT (PAD)	HYUNDAI	NEW GRANDEUR (AZERA)2.0	NEW GRANDEUR(AZERA)2.0/2.5 (95.04~98.02) CARSTA(99.05~03.03) SANTAMO(96.01~02.12)	58101 M2A00 58101 M2A01 58115 370A0 58115 370A1 MZ690331		SP1054-F	HP0010				
FPH04R	REAR (PAD)	HYUNDAI	NEW GRANDEUR (AZERA)2.0 R	NEW GRANDEUR(AZERA)2.0/2.5 (95.04~98.02) NEW GRANDEUR(AZERA)2.5 (95.04~98.01) CARSTA(99.05~03.03) SANTAMO(96.01~02.12)	58302 M2A00 58302 M2A01 58302 M2A10		SP1054-R	HP0011		23608 23609 23610		
FPH05	FRONT (PAD)	HYUNDAI	NEW GRANDEUR (AZERA)3.0	NEW GRANDEUR(AZERA)3.0/3.5 (95.04~98.09) DYNASTY(99.10~05.08)	58101 37A10 58101 37A30 58115 375A0		SP1081	HP0012				

FRIXA CODE	POSITION	MAKER	REPRESENTATIVE MODEL	INTERCHANGEABLE	PARTS NO.		SP NO.	HP NO.	FMSI NO.	WVA NO.	TRW	E-MARK (E90)
FPH05R	REAR (PAD)	HYUNDAI	NEW GRANDEUR3.0	NEW GRANDEUR(AZERA) 2.5(98.01~98.09) NEW GRANDEUR(AZERA) 3.0/3.5 (95.04~98.09) DYNASTY(99.10~05.08) EQUUS(CONTINENTAL) 3.0/3.5(15°), 4.5(OLD) (99.04~08.12)	58215 375A0 58302 3BA00	58201 37A10 58302 3BA10	SP1082	HP0013				
FPH06	FRONT (PAD)	HYUNDAI	PORTER	NEW GRACE(H100)(94.05~03.12) PORTER(NEW)(96.03~03.12)	58101 43A00 58101 44A00 58101 44A10 58101 4BA00 58101 4BA10 58115 44020S	58115 44000S 58101 49A00 58115 44010 58140 44510	SP1072	HP0019	D1137-8247	23081 23082 23083	GDB3089	○
FPH07	FRONT (PAD)	HYUNDAI	GALLOPER	GALLOPER,GALLOPER INNOVATION (91.09~03.12)	SB000027 SB00010 SB000100 S2000100 58101 M1A00		SP1053	HP0017		23518 23519 23520		
FPH08	FRONT (PAD)	HYUNDAI	MIGHTY	MIGHTY2.5TON(~04.09) MIGHTY3.5TON(~04.09) COUNTY(98.06~06.04)	58101 45A00 58101 5HA00 58101 5HA30 58140 45020		SP1080	HP0028	D716-8941			
FPH09	FRONT (PAD)	HYUNDAI	STAREX(H1)	STAREX(H1)(97.03~02.09) LIBERO(97.03~03.11)	58101 4AA00 58101 4AA10 58101 4AA11 58101 4AA30 58101 4AA31 58101 4AA32	58101 4AA60 58101 4AA61 58101 4AA80 58101 4AA81 58115 4AA00	SP1099	HP0018		23536 23537 23538	GDB3201	○
FPH09N	FRONT (PAD)	HYUNDAI	STAREX(H1)(NEW)	STAREX(H1)(NEW)(02.10~07.05) LIBERO(03.12~07.12)	58101 2AA26 58101 39A40 58101 47A00 58101 4AA20 58101 4AA26 58101 4AA90		SP1157	HP0024	D903-7781, D955-7854	23569 23670 23571	GDB3244 GDB3257 GDB3297 GDB3343 GDB3412	
FPH09R	REAR (PAD)	HYUNDAI	STAREX(H1) R	STAREX(H1)(NEW)(04.01~07.04) NEW SANTAFE(06MY)(05.11~09.10)	58302 2BA00 58302 2BA20 58302 2BA40 58302 4AA00	58302 4AA40	SP1178		D1297-8414	24464 24488 24489 24490		○
FPH10	FRONT (PAD)	HYUNDAI	ATOZ(SANTRO)	ATOZ(SANTRO)(97.09~00.11) VISTO(98.02~00.11)	58101 02A00 58115 020S0		SP1096	HP0001	D1148-8225 D1148-8258	23238 23239 23240	GDB3165	○
FPH10N	FRONT (PAD)	HYUNDAI	ATOZ(SANTRO)(NEW)	ATOZ(SANTRO)(NEW)(00.12~02.12) VISTO(NEW)(00.12~04.01)	58101 02A10 58101 02A20 58101 05A10 58101 05A30		SP1149	HP0002	D1142-8253	24277 24397 24398	GDB3377	○
FPH11	FRONT (PAD)	HYUNDAI	SANTAFE	SANTAFE 2WD(00.02~05.11) TRAJET XG(15°)(99.09~07.05) EQUUS(CONTINENTAL)3.0/3.5(15°) (99.04~02.05)	4K52Y 3323Z 58101 26A00 58101 26A10 58101 26A20 58101 26A30 58101 39A20 58101 3AA10 58101 3AA20 58101 3AA30		SP1115	HP0014	D864-7792 D903-7781 D955-7854	23569 23670 23571	GDB3244 GDB3257 GDB3297 GDB3343 GDB3412	○
FPH11N	FRONT (PAD)	HYUNDAI	SANTAFE 4WD	SANTAFE 4WD(00.02~05.11) NEW GRANDEUR(AZERA) XG3.0(12°) (02.07~05.05)	0K52Y 3323Z		SP1190		D864-7739			
FPH12	FRONT (PAD)	HYUNDAI	TERRACAN	TERRACAN(01.01~04.07)	58101 H1A00 58101 H1A10		SP1097	HP0022	D1713-8938	24059 24060 24061	GDB3299	
FPH12R	REAR (PAD)	HYUNDAI	TERRACAN R	TERRACAN(01.01~04.07) NEW TERRACAN(04.08~06.10)	58302 H1A00 58302 H1A10		SP1098	HP0023	D1715-8940	23813 24201 24202	GDB3296	

FRIXA CODE	POSITION	MAKER	REPRESENTATIVE MODEL	INTERCHANGEABLE	PARTS NO.		SP NO.	HP NO.	FMSI NO.	WVA NO.	TRW	E-MARK (E90)
FPH14	FRONT (PAD)	HYUNDAI	TUCSON	TUCSON(04.03~09.07) NEW SPORTAGE(04.08~10.02)	58101 1FA50 58101 1FE01 58101 2EA21		SP1155		D1125-8306 D924-7825 D924-7990 D924-8232	23891 23892 23893	GDB3352 GDB3386 GDB3409	○
FPH15	FRONT (PAD)	HYUNDAI	PORTER II	PORTER II(04.11~)	58101 4FA00	58101 4FA10	SP1174	HP0029				
FPH16	FRONT (PAD)	HYUNDAI	EQUUS (CONTINENTAL) (NEW)4.5	EQUUS(CONTINENTAL)3.0/3.5/4.5(17") (04.06~09.02) EQUUS(CONTINENTAL) 09MY(09.03~11.09)	58101 3BA20 58101 3MA11 58101 3MA10 58101 3NA00	58101 3NA01 58101 3NA02 58101 3BA10	SP1206					
FPH17	FRONT (PAD)	HYUNDAI	NF SONATA 16"	NF SONATA 2.4 (04.09~07.09) NF TRANSFORM 2.4 (07.10~) LOTZE 2.4 (05.11~07.11) LOTZE INNOVATION 2.4 (07.12~10.04) OPIRUS(AMANTI)(NEW)(06.06~12.02) GRANDEUR(AZERA) TG(05.06~10.12) THE LUXURY GRANDEUR(09.12~)	58101 3KA20 58101 3KA30 58101 3KA31 58101 3LA10 58101 3LA11 58101 3LA20	58101 2EA30 58101 3KS31 58302 2KA50	SP1182	HP0031	D1125-8233	23891 23892 23893	GDB3352 GDB3386 GDB3409	○
FPH17R	REAR (PAD)	HYUNDAI	NF TRANSFORM R	NF TRANSFORM R(07.12~) OPIRUS(AMANTI)(NEW) R(06.06~12.02) SOUL R(08.09~13.09) LOTZE INNOVATION 16" R(05.11~10.04) KORANDO C R(11.01~) THE LUXURY GRANDEUR(AZERA) R(09.12~) YF SONATA(HYBRID) R(11.03~) K5(NEW OPTIMA)15" R(10.05~) TIVOLI 2WD R(15.01~) TIVOLI Armour 2WD R(2017.07~) TIVOLI Air 2WD R(2016.09~)	58302 2EA31 58302 2KA00 58302 2KA10 58302 2KA50 58302 2TA60 58302 3FA01 58302 3KA31 58302 3KA52 58302 3KA62	58302 3KA63 58302 3LA10 58302 3LA20 58302 3QA10 48413 340A0 58302 2TA20 58302 2TA40	SP1239	HP0038	D1313-8428 D1445-8428 D1446-8428 D1544-8428	24934 24935 24936		○
FPH19	FRONT (PAD)	HYUNDAI	VERACRUZ	VERACRUZ(06.05~)	58101 3JA00 58101 3JA01 58101 3JA50		SP1203		D1301-8417			
FPH19R	REAR (PAD)	HYUNDAI	VERACRUZ R	VERACRUZ(06.05~) GRAND STREX(07.05~) GRAND CARNIVAL(SEDONA)(05.07~)	58302 3JA00 58302 3JA50 58302 4DA00 58302 4DE00 58302 4HA00 58302 4HA50	58302 A9A00	SP1192		D1302-8418	24599 24600 24686	GDB3449	○
FPH20	FRONT (PAD)	HYUNDAI	I-30	I-30(07.06~) ALL NEW SOUL(13.10~) FORTE(08.08~) CEE-D 07"	58101 1MA00 58101 1MA01 58101 1MA21 58101 1MA60 58101 1XA00	58101 1HA10 58101 1HA20 58101 1MA20 58101 B2A00 58101 2LA00 58101 2LA10	SP1240		D1397-8505	23966 23987 23988	GDB3342 GDB3450	○
FPH21	FRONT (PAD)	HYUNDAI	AVANTE(ELANTRA) 06MY	AVANTE(ELANTRA) 06MY(06.06~10.07)	58101 2HA10		SP1202			23891 23892 23893	GDB3352 GDB3386 GDB3409	○
FPH22	FRONT (PAD)	HYUNDAI	MIGHTY 06MY	MIGHTY 06MY(06.04~) COUNTY 06MY(06.04~)	58160 5K300		SP1207		D1062-7968		GDB1695 GDB5050	
FPH23	FRONT (PAD)	HYUNDAI	GENESIS	GENESIS(08.01~12.11)	58101 3MA00	58101 3MA20	SP1246		D1384-8400			

FRIXA CODE	POSITION	MAKER	REPRESENTATIVE MODEL	INTERCHANGEABLE	PARTS NO.		SP NO.	HP NO.	FMSI NO.	WVA NO.	TRW	E-MARK (E90)
FPH23R (FPK26R)	REAR (PAD)	KIA	GENESIS R	MOHAVE(BOREGO) R(08.01~) GENESIS, 13MY R(08.01~) CHAIRMAN W R(08.04~) GENESIS COUPE 17" R(08.10~) MAXCRUZ R(13.03~) EQUUS(CONTINENTAL) 09MY, 4.5(NEW) R (09.01~) SORENTO"R" R(09.04~) NEW SANTAFE 09MY R(09.11~) K9 5.0 R	58302 2JA00 58302 2PA00 58302 2PA70 58302 2WA00 58302 2MA00 58302 3MA00 58302 3MA01 58302 3NA00 48450 140A0	58302 0WA00 58302 2WA70 58302 4DU02 58302 2MA90 58302 B8A00 58302 2WA70 58302 2WA01	SP1247		D1387-8496 D1284-8524 D1916-8575	25153 25154 25155		○
FPH24	FRONT (PAD)	HYUNDAI	GENESIS COUPE 3.8	COUPE 3.8 18"19"(BREMBO TYPE)(08.10~)	58101 2MA10		SP2119 (HP2119)		D1001-7942	23092 23325		
FPH24R	REAR (PAD)	HYUNDAI	GENESIS COUPE 3.8 R	COUPE 3.8 18"19"(BREMBO TYPE)(08.10~)	58302 2MA10		SP1494 (HP1494)		D960-7858 D960-7954	23142		
FPH25 (FPH33)	FRONT (PAD)	HYUNDAI	YF SONATA	YF SONATA 2.0(09.09~) LF SONATA 15"(14.03~) SPORTAGE R 2WD(10.03~11.01) TUCSON IX 2WD(09.08~11.12)	58101 2SA00 58101 2SA30 58101 3SA20 58101 3SA21 58101 3SA25 58101 3SA26	58101 1KA00 58101 B2A10	SP1374		D1447-8615	25187 25188 25189		○
FPH25R	REAR (PAD)	HYUNDAI	YF SONATA R	YF SONATA R(09.09~) LF SONATA R(14.03~) K7(CADENZA) R(10.05~) VERNA 05MY R(05.08~10.12) PRIDE 05MY R(05.08~11.10) FORTE HYBRID R(08.08~) I-30 R(07.06~11.12) TUCSON IX R(09.08~) SPORTAGE"R" R(10.03~) GRANDEUR(AZERA) HG R(11.02~)	58302 0ZA00 58302 1HA00 58302 1HA10 58302 1MA00 58302 2S000 58302 2SA30 58302 2SA70 58302 3RA00 58302 3SA20 58302 1XA30 58302 4WA10	58302 1JA30 58302 1MA40 58302 2LA00 58302 2LA31 58302 2LA40 58302 2SA00 58302 2SA10 58302 2SA35 58302 2YA30 58302 2YA50 58302 2YA70 58302 1DA01	SP1187		D1398-8506	24320 24321 24322	GDB3421	○
FPH26	FRONT (PAD)	HYUNDAI	AVANTE(ELANTRA) MD	AVANTE(ELANTRA) MD(10.08~) VELOSTER (11.03~) K3(CERATO)(12.10~) I-30 12MY(12.01~)	58101 2VA00 58101 2VA10 58101 3VA10 58101 3XA00 58101 3XA20 58101 A5A00 58101 A6A00 58101 A7A00	58101 2VA50 58101 3XA10	SP1400		D1543-8751 D1595-8810			○
FPH26R	REAR (PAD)	HYUNDAI	AVANTE(ELANTRA) MD R	AVANTE(ELANTRA) MD R(10.07~) ACCENT(SOLARIS) 11MY R(11.01~) PRIDE 12MY R(11.11~) I-40 R(12.01~) K5 EPB TYPE R(10.05~) ALL NEW CARENS R(13.03~) K3(CERATO) 13" R TIVOLI 4WD R(15.01~) TIVOLI Armour 4WD R(2017.07~) TIVOLI Air 4WD R(2016.09~)	58302 1RA30 58302 3XA30 58302 A4B00 58302 A4B50 58302 B4A30 58302 3XA00	48413 350A0 58302 1WA30 58302 1WA35 58302 3ZA00 58302 3ZA60 58302 4CA00	SP1401		D1544-8428	24934 24935 24936		○
FPH27	FRONT (PAD)	HYUNDAI	ACCENT(SOLARIS) 11MY	ACCENT(SOLARIS) 11MY(11.01~) PRIDE 12MY(12.01~)	58101 1RA00 58101 1RA01 58101 1RA05 58101 1WA00 58101 1WA05 58101 1WA35	58101 1RA10 58101 4LA00 58101 C7A00	SP1399		D1593-8806	25348 25350 25359		○

FRIXA CODE	POSITION	MAKER	REPRESENTATIVE MODEL	INTERCHANGEABLE	PARTS NO.		SP NO.	HP NO.	FMSI NO.	WVA NO.	TRW	E-MARK (E90)
FPH28	FRONT (PAD)	HYUNDAI	GRANDEUR(AZERA) HG	GRANDEUR(AZERA) HG 3.0 17"(11.02~11.12) GRANDEUR HG 3.0 18"(11.02~) GENESIS COUPE 17"(08.10~) K5 2.0 GDI 18"(11.07~) K5(NEW OPTIMA) TURBO GDI (18") VELOSTER TURBO(11.02~) K3 KOUP(12.10~) K3 16" (13.08~16.03) K3 16" (16.03~) (SPRING HOLE - 58101A7A21) VELOSTER (12.03~14.12)	58101 2MA00 58101 2TA20 58101 2TA21	58101 4CA10 58101 A7A20 58101 A7A21 58101 2VA20	SP1403 SP1720 SP1721		D1413-8527	24915 24917		○
FPH28NR	REAR (PAD)	HYUNDAI	GRANDEUR(AZERA) HG 3.3 EPB TYPE R	GRANDEUR(AZERA) HG 3.3 EPB TYPE (11.02~) ASLAN 15MY	58302 3VA50		SP1499					
FPH29	FRONT (PAD)	HYUNDAI	EQUUS (CONTINENTAL) 11MY	EQUUS(CONTINENTAL) (18") 12MY(11.12~) GENESIS 13MY(12.12~) K9 3.8(12.04~)	58101 3NA50 58101 B1A30	58101 B1A10 58101 B1A20	SP1547		D1799-9030			
FPH30 (FPK21)	FRONT (PAD)	HYUNDAI	GRAND STAREX(H1)	NEW CARNIVAL(SEDONA)(16")(06.02~) GRAND STAREX(H1)(07.05~)	58101 4DA00 58101 4DE00 58101 4HA00	58101 4HA01 58101 4HA10 58101 4HA50	SP1238		D1566-8775	24598 24606	GDB3448	○
FPH31R	REAR (PAD)	HYUNDAI	VELOSTER	VELOSTER(11.02~) K7 EPB TYPE(10.05~) YF SONATA EPB(09.09~) LF SONATA EPB(14.03~) ALL NEW SOUL(13.10~) K3(CERATO)(12.10~) I-30 12MY (HAND TYPE)(12.01~) K3 KOUP(12.10~)	58302 2VA30 58302 3RA70 58302 A5B30 58302 A7B30	58302 C1A50 58302 G3A60 58302 A7B31	SP1407		D1594-8428	25337 25338 25339		○
FPH31NR	REAR (PAD)	HYUNDAI	VELOSTER EPB TYPE R	VELOSTER EPB TYPE R(11.02~) I-30 12MY EPB TYPE R(12.01~) LF SONATA EPR TYPE R(14.03~) LF SONATA NEW RISE 15" EPR TYPE R (17.02~)	58302 A5A20 58302 B2A00 58302 D5A50	58302 D4A50 58302 E6A50 58302 G3A40	SP1851		D1813-8428			
FPH32	FRONT (PAD)	HYUNDAI	MIGHTY 11MY F	MIGHTY 11MY (11.07~)	58101 5LA00 58101 5MA00		SP1552					
FPH33	FRONT (PAD)	HYUNDAI	LF 15 F	LF SONATA (14.03~) ALL NEW K5 15" (15.07~) LF SONATA NEW RISE 15"(17.02~) LF SONATA NEW RISE 15" LPI(17.02 ~ 17.11)	58101 C1A00 58101 D1A00 58101 D4A00		SP1681					
FPH33R	REAR (PAD)	HYUNDAI	LF R	LF SONATA R(14.03~) ALL NEW K5 R(15.07~) LF SONATA NEW RISE 14" R(17.02 ~) LF SONATA NEW RSIE 14" LPI R (17.02 ~ 17.11) LF SONATA NEW RISE 15" R(17.02 ~)	58302 D4A00 58302 C1A00 58302 C1A10	58302 C1A15 58302 C2A10 58302 E6A10	SP1850					
FPH34	FRONT (PAD)	HYUNDAI	LF 16 F (LF 17" F)	LF SONATA 16" (14.03~) LF SONATA HYBRID 16" (14.03~) I30 16" (16.09~) ALL NEW K5 16"(15.07~) KONA (16", 17") (17.07~) LF SONATA NEW RISE 16"(17.02~) LF SONATA NEW RISE 16" LPI(17.11~) LF SONATA NEW RISE 17"(17.02~)	58101 C1A10 58101 C1A20 58101 C1A30 58101 D4A10 58101 D4A20 58101 GA310 58101 J9A10	58101 E6A10	SP1682 (LF 16") SP1683 (LF 17") SP1848 (LF 16") SP1849 (LF 17")		D1803-9035 D1826-9035 D1855-8614			○

FRIXA CODE	POSITION	MAKER	REPRESENTATIVE MODEL	INTERCHANGEABLE	PARTS NO.		SP NO.	HP NO.	FMSI NO.	WVA NO.	TRW	E-MARK (E90)
FPH35	FRONT (PAD)	HYUNDAI	ALL NEW TUCSON	IONIQ NIRO SPORTAGE 16MY(15.09 ~) AVANTE AD SPORT(16.04 ~)	58101 D3A00 58101 D7A10	58101 F2A50 58101 D7A00 58101 D9A00	SP1844		D1847-9075			
FPH35R	REAR (PAD)	HYUNDAI	ALL NEW TUCSON (HAND TYPE)	SPORTAGE 16MY(15.09 ~)	58302 D3A00		SP1845		D1848-8428			
FPH35NR	REAR (PAD)	HYUNDAI	ALL NEW TUCSON (EPB TYPE)	IONIQ R NIRO R SPORTAGE 16MY EPB R(15.09 ~) AVANTE AD R(15.09 ~) GRANDEUR IG EPB R	58302 D3A70 58302 G7A30 58302 F2A30 58302 F2000 58302 G8A50		SP1846					○
FPH36	FRONT (PAD)	HYUNDAI	GENESIS EQ900(HI)		58101 D2A00		SP1955 (HP1055)					
FPH36R	REAR (PAD)	HYUNDAI	GENESIS EQ900(HI)		58302 D2A00 58302 D2A03 58302 D2A05		SP1978 (HP1978)					
FPH37	FRONT (PAD)	HYUNDAI	AVANTE AD	IONIQ NIRO	58101 F2A00 58101 G2A00 58101 F2000		SP1905					○
FPH38	FRONT (PAD)	HYUNDAI	SOLATI		58101 59A00		SP4037					
FPH38R	REAR (PAD)	HYUNDAI	SOLATI		58301 59A00		SP4038					
FPH39	FRONT (PAD)	HYUNDAI	GRAND STAREX 17MY		58101 4HA15		SP1890					
FPH40	FRONT (PAD)	HYUNDAI	GRANDEUR IG 18"		58101 G8A30							
FPH41	FRONT (PAD)	HYUNDAI	PORTER II 14MY	BONGO III TRUCK 14MY	58101 4FA40 58101 4EA30		SP1735	HP0063				
FPH42	FRONT (PAD)	HYUNDAI	PORTER II 17MY	BONGO III TRUCK 17MY	58101 4FA20 58101 4EB20		SP1174A					
FPH43	FRONT (PAD)	HYUNDAI	SANTAFE THE PRIME		58101 2WA40		SP4102					
FPH44	FRONT (PAD)	HYUNDAI	I-30 18MY	KONA (15") (17.07~) ALL NEW SOUL 18MY	58101 J9A00 58101 G3A00		SP4098					
FPH45	FRONT (PAD)	HYUNDAI	GENESIS G80 2WD 18", 19"		58101 B1A01	58101 1UA50	SP4227					
FPH45R	REAR (PAD)	HYUNDAI	GENESIS G80		58302 B1A30		SP1546A					
FPH46	FRONT (PAD)	HYUNDAI	GENESIS G80 4WD 18", 19"		58101 B1A11 58101 B1A21		SP4228					
FPH47	FRONT (PAD)	HYUNDAI	GENESIS G70 17"	STINGER 17"	58101 J5A00		SP1882					
FPH47R	REAR (PAD)	HYUNDAI	GENESIS G70	STINGER R	58302 J5A00 58302 G9A20	58302 C6A00	SP1883					
FPH48	FRONT (PAD)	HYUNDAI	GENESIS G70 18"	STINGER 18"	58101 G9A20		SP1875					

FRIXA CODE	POSITION	MAKER	REPRESENTATIVE MODEL	INTERCHANGEABLE	PARTS NO.		SP NO.	HP NO.	FMSI NO.	WVA NO.	TRW	E-MARK (E90)
FPHXDF	FRONT (PAD)	HYUNDAI	AVANTE(ELANTRA) XD	AVANTE(ELANTRA) XD1.5(00.03~04.04)	58101 2DA00 58101 2DA10	58115 2D000	SP1147	HP0020				
FPHXGF	FRONT (PAD)	HYUNDAI	GRANDEUR(AZERA) XG	GRANDEUR(AZERA) XG2.5/3.0(15") (98.09~02.06) GRANDEUR(AZERA) XG2.7 TAXI(15") (98.09~02.06)	58115 391S0		SP1115	HP0015	D864-7792			
FPHXGN	FRONT (PAD)	HYUNDAI	NEW GRANDEUR (AZERA) XG	GRANDEUR(AZERA) XG2.5/3.0(16") (02.07~05.05) EQUUS(CONTINENTAL)3.0/3.5(16") (01.07~03.09) EQUUS(CONTINENTAL)4.5 (01.02~04.05) OPIRUS(AMANTI) (03.02~06.05) RODIUS(STAVIC) (04.06~) NEW TERRACAN (04.08~06.10) TRAJET XG(16") (02.07~07.05) KORANDO TURISMO (13.03~)	48130 21A00 4813A 21100 58101 39A60 58101 3BA01 58101 3BA02 58101 3FA00 58101 3FA10 58101 3FA20	48130 21A01	SP1161	HP0016	D1013-7917	23726 23727 23728 24167	GDB3257	
FPHXGR	REAR (PAD)	HYUNDAI	GRANDEUR(AZERA) XG R	EF SONATA(98.04~00.12) NEW EF SONATA(01.01~04.08) NF SONATA(04.09~07.09) GRANDEUR(AZERA) XG, NEW GRANDEUR(AZERA) XG(98.04~05.05) LOTZE(04.11~07.11) OPIRUS(AMANTI)(03.02~06.05) OPTIMA/OPTIMA REGAL(02.08~05.10) GRANDEUR(AZERA) TG(05.06~10.12) TUCSON(04.03~09.07) NEW SPORTAGE(04.08~10.02) TRAJET XG(99.09~07.05) SANTAFE 2WD/4WD(00.02~05.11) LAVITA(00.04~) NEW AVANTE(ELANTRA) XD2.0(04.05~06.05) AVANTE(ELANTRA) 06MY(06.06~10.07)	58215 383S0 58302 1CA10 58302 1FA00 58302 1FE00 58302 26A00 58302 26A20 58302 26A30 58302 2EA00 58302 2EA30 58302 2GA00 58302 2HA00 58302 38A00 58302 38A10 58302 38A20 58302 38A30 58302 1FA50	58302 39A40 58302 3AA00 58302 3AA20 58302 3CA10 58302 3CA20 58302 3FA00 58302 3KA10 58302 3KA30 58302 3KA40 58302 3KA50 58302 3KA60 58302 38A40 58302 3FA10 58302 1CA00 58302 26A10 58302 26A40 58302 3KA51	SP1117	HP0008	D813-7688 D863-7688	23543 23544 23545	GDB3282 GDB3284 GDB3298 GDB3413	○
FPK01	FRONT (PAD)	KIA	PRIDE	PRIDE/BETA(86.~99.)	D001 3328Z D012 3328Z DA19 3328Z DA19 3328ZA	KK150 33100 KK150 3323Z KK150 3328Z KK325 3328Z	SP1049	HP1001	D402-7291	21355 21356 21357	GDB773	○
FPK01N	FRONT (PAD)	KIA	PRIDE(NEW)	PRIDE 05MY(NEW RIO) (05.08~11.10) VERNA(ACCENT) 05MY(05.08~10.12)	58101 1GA00 58101 1GE00 58101 1JA10		SP1186		D1156-8266	24317 24318 24319	GDB3420	○
FPK01NR	REAR (PAD)	KIA	PRIDE 05MY R	VERNA 05MY(05.08~10.12) PRIDE 05MY(05.08~11.10)	58302 1GA00 58302 1GE00		SP1187		D1157-8267 D1398-8506	24320 24321 24322	GDB3421	O
FPK02	FRONT (PAD)	KIA	CONCORD	CONCORD CAPITAL	0K900 49230 GA2949280 GA9749280 GA9749280A GGY8 3328Z GGY8 3328Z9A 0K9004923Z		SP1051		D317-7169	21360 20794 21168 21666	GDB1036	

FRIXA CODE	POSITION	MAKER	REPRESENTATIVE MODEL	INTERCHANGEABLE	PARTS NO.		SP NO.	HP NO.	FMSI NO.	WVA NO.	TRW	E-MARK (E90)
FPK03	FRONT (PAD)	KIA	SEPHIA	SEPHIA I/II(92.~00.06) SHUMA(97.03~99.)	0K20A 3323Z 0K240 3323Z 0K2A2 3323Z 0K2A3 3323Z 0K2A4 3323Z 0K2A4 3323ZB 0K2A3 3323ZB	0K3Y2 3323Z 0K2X3 3323Z 0K2Y1 3323Z 0K2Y2 3323Z 0K2Y3 3323ZA 0K239 3323Z	SP1063	HP1003 HP1021	D649-7529	23384 23385 23386	GDB3096	○
FPK03R	REAR (PAD)	KIA	SEPHIA R	SEPHIA R NEW SEPHIA R	0K20H 3323Z 0K2Y2 2623Z 1095598 6500959	7114005 547698451 91AB2M008BC	SP1064	HP1004	D693-7568 7314-D426	21832	GDB1124	
FPK04	FRONT (PAD)	KIA	CREDOS	CREDOS(95.03~98.03)	0K9A0 3328Z 0K9A6 3328Z 0K9A7 3328Z 0K9Y6 3328Z		SP1079-F	HP1007		23450 23451	GDB3173	
FPK04N	FRONT (PAD)	KIA	CREDOS II	CREDOS II(98.04~00.07) CARENS(RONDO)(99.06~02.03) RIO SF 1.5(14")(02.06~05.04) SPECTRA(01.02~03.07)	0K2N1 3328Z 0K2N1 3328ZA 0K9B3 3328Z 0K9B6 3328Z 0K9D0 3323Z 0K9D0 3328Z 58115 FDB00 58115 FDC00 K0BB1 3323Z		SP1113	HP1008	D889-7767	23873 23874 23875	GDB3245 GDB3285	○
FPK04R	REAR (PAD)	KIA	CREDOS R	CREDOS I/II(95.03~00.07) SEPHIA II(95.~99.) SHUMA(97.~99.) SPECTRA(01.02~) X-TREK(03.04~06.03) CARENS(RONDO) I/II(99.06~06.03)	0K2FA 2628Z 0K2FC 2628Z 0K9A0 2628Z		SP1079-R		D775-7642	23455 23456 23457		○
FPK05	FRONT (PAD)	KIA	AVELLA	AVELLA(94.02~99.12) ELAN(96.07~98.) RIO(99.11~02.05) FORD FESTIVA 94" FORD LASER 90" MAZDA 121 90" MAZDA 323 IV 89" MAZDA 323 V 94" MAZDA DEMIO 98" MAZDA FAMILIA 89"	0K30A 3328Z B455 33292 B4Y6 3323Z B5Y6 3323Z B5Y6 3323Z9A B5Y6 3323ZA B5Y6 3328Z B5Y6 3328Z9A B5Y6 3328ZA B5Y8 3323ZA BCYW 3323Z	BCYW 3323ZC BRY0 3328Z BRY7 3323ZA DCY0 3323Z DCY0 3323ZA DCY0 3323ZB DCY1 3323Z DCY5 3323Z KK370 3323Z KK370 3328Z K0BA2 3328Z KQBA2 3328Z	SP1067	HP1002	D466-7219 D466-7613	21654 21655 21656	GDB1024 GDB3206 GDB3252 GDB3262	○
FPK06	FRONT (PAD)	KIA	POTENTIA	POTENTIA(98.06~01.04)	0K998 3328Z 0K998 3328ZA V9118C026 H330 33 28ZA MB334326 MC862934 MC869779 04465 04020 04465 04040 04465 22090 04465 43020 AY04 0MA 003	H260 33 28Z H260 33 28ZA H260 33 28ZB H260 33 625 H261 33 28ZA H330 33 28Z H722 33 23Z H722 33 23ZA H722 33 28Z H722 33 28ZA HE21 33 28ZA HE21 33 28Z HE21 33 28ZB	SP1060-F	HP1005	7276-D389 7320-D433	21318 21538		
FPK06R	REAR (PAD)	KIA	POTENTIA R	POTENTIA(NEW)(98.06~)	0K9Y1 2643ZA		SP1084	HP1006				
FPK07	FRONT (PAD)	KIA	SPORTAGE	SPORTAGE(93.~00.)	0K011 3323Z 0K0Y1 3323Z 0K0Y2 3323Z		SP1070	HP1028	D670-7550 D719-7550A	21892 21893 21894	GDB3123	
FPK07N	FRONT (PAD)	KIA	SPORTAGE GRAND	SPORTAGE GRAND(00.~02.) RETONA(00.~02.)	0K045 3323Z		SP1118	HP1015	D774-7641	23442 23443 23444	GDB3241	○

FRIXA CODE	POSITION	MAKER	REPRESENTATIVE MODEL	INTERCHANGEABLE	PARTS NO.		SP NO.	HP NO.	FMSI NO.	WVA NO.	TRW	E-MARK (E90)
FPK08	FRONT (PAD)	KIA	BESTA	BESTA(87.07~97.04) WIDE BONGO(96.01~97.04) FRONTIER(OLD)(97.10~99.06)	0K70Y 3328Z 0K710 3328Z 0K71E 3328Z 0S08349280 S23149280 S23149280A	S2YA3323Z S2YA3328Z SA2649280 SA9149280 SA94492809A SF043328Z9A SF043328Z	SP1044	HP1010	D1199-8319	20002 20191 20192	GDB737 GDB983	○
FPK09	FRONT (PAD)	KIA	NEW FRONTIER	NEW FRONTIER(99.06~03.12) TOPIC(87.~91.)	0K60A 3328Z 0K60A 3328ZA 0K60B 3328ZA 0K60B 3328Z AA70A 33625 AA70A 33635 RB913311261 RB91331626		SP1056	HP1014	D1513-8722	23784 23785 23786	GDB3145	○
FPK10	FRONT (PAD)	KIA	PREGIO	PREGIO(95.10~98.05)	0K72A 3328Z		SP1091	HP1013		23484 23485 23486	GDB3263	
FPK10N	FRONT (PAD)	KIA	NEW PREGIO	NEW PREGIO(98.06~03.12) CARNIVAL(SEDONA) II(99.01~03.12)	0K56A 3323Z 0K56B 3323Z 0K58A 3323Z 0K72G 3328Z 0K75A 3328Z	0K75B 3328Z 0K56B 3323ZA	SP1116	HP1012		23649 23650 23651	GDB3261 GDB3301	○
FPK11	FRONT (PAD)	KIA	TOWNER	TOWNER(TRUCK/VAN)(96.~02.)	AA100 33625 K0BM1 3328Z		SP1073	HP1019		20780		
FPK13	FRONT (PAD)	KIA	CARNIVAL (SEDONA)	CARNIVAL(SEDONA)(98.01~99.01)	0K552 3323Z 0K553 3323Z 4713175 4778058 4883344 83504371 8305252531	58101 4EB01 0K555 3323Z	SP1112	HP1011	D477-7338A D712-7358 D712-7507A	21822 21823 21824 21825	GDB1153 GDB4104	
FPK14N	FRONT (PAD)	KIA	CARENS(RONDO) II	CARENS(RONDO) II(02.03~06.03) X-TREK(03.04~06.03)	0K2FA 3328Z 0K2JA 3328Z 58101 1HA00		SP1162	HP1020		23966 28987 23988	GDB3342 GDB3450	○
FPK15	FRONT (PAD)	KIA	SORNETO	SORENTO(02.02~09.03)	58101 3E000 58101 3ED00 58101 3ED02 58101 3EE00 58101 3EE01		SP1153	HP1017	D1301-8417	24092 24178 24179	GDB3452	○
FPK15R	REAR (PAD)	KIA	SORENTO R	SORENTO(02.01~)	58302 3ED00 58302 3ED01 58302 3ED02 58302 3EE00		SP1154	HP1018	D1261-8379	23993 23997 24058	GDB3344	○
FPK16	FRONT (PAD)	KIA	BONGO III 1.4TON	FRONTIER1.3TON (99.06~03.12) BONGO III 1.4TON (04.01~) PAMAX1.4TON~3.5TON (04.01~)	0K40D 3328Z 58101 4EB01		SP1148	HP1016				
FPK17	FRONT (PAD)	KIA	CERATO(FORTE)	CERATO(FORTE)1.5(14")(03.10~05.03) LAVITA(NEW)(02.04~) AVANTE(ELANTRA) XD1.5(ABS)(02.04~04.04) AVANTE(ELANTRA) XD2.0(00.03~04.04) NEW AVANTE(ELANTRA) XD1.6(04.05~06.05)	58101 17A10 58101 17A20 58101 2DA31 58101 2DA40 58101 2FA00 58101 2FA01	58101 2DA30 58101 2DA60 58101 2SA31	SP1152	HP0027	D941-7843	24031 24032 24033	GDB3378	○
FPK17N	FRONT (PAD)	KIA	CERATO(FORTE) 15"	CERATO(FORTE)2.0(15")(03.10~05.03) NEW CERATO(FORTE)1.5(15") (05.03~08.09)	58101 2FA10 58101 2FA20		SP1167	HP1031	D1074-7979	24218 24219 24220	GDB3367	○
FPK18	FRONT (PAD)	KIA	BONGO III TRUCK	BONGO III TRUCK(04.01~)	58101 4EA00	K0BL 3328Z	SP1175	HP1023				
FPK19	FRONT (PAD)	KIA	BONGO III VAN	BONGO III VAN(04.01~)	58101 4EB00	K0BL1 3328Z	SP1176	HP1024				

FRIXA CODE	POSITION	MAKER	REPRESENTATIVE MODEL	INTERCHANGEABLE	PARTS NO.		SP NO.	HP NO.	FMSI NO.	WVA NO.	TRW	E-MARK (E90)
FPK20	FRONT (PAD)	KIA	MORNING(PICANTO)	MORNING(PICANTO)(04.01~10.12)	58101 07A00 58101 07A10 58101 07A20 58101 0XA00 58101 0XA01 58101 0XA10	58101 E1A00	SP1172	HP1025	D1601-8815	24275 24410 24411		○
FPK20N	FRONT (PAD)		MORNING (PICANTO) 11MY	MORNING(PICANTO) 11MY(11.02~) RAY(11.11~)	58101 1YA00 58101 1YA10 58101 1YA30	58101 1YA20 58101 A3A00	SP1405			25365 25366 25367		○
FPK20NR	REAR (PAD)		MORNING (PICANTO) 11MY	MORNING(PICANTO) 11MY R(11.02~) RAY R(11.11~) KONA R(17.07~)	58302 1YA00 58302 1YA30 58302 J9A00	58302 A3A00 58302 1KA30 58302 1YA50	SP1406					○
FPK20R	REAR (PAD)	KIA	MORNING (PICANTO)	MORNING(PICANTO)(04.01~10.12)	58302 07A00 58302 07A10 58302 0XA00	58302 E1A00	SP1189			24276 24479 24480		○
FPK22	FRONT (PAD)	KIA	GRAND CARNIVAL (SEDONA)	GRAND CARNIVAL(SEDONA)(17")(05.07~)	58101 4DB00 58101 4D800		SP1191					
FPK23	FRONT (PAD)	KIA	ENTERPRISE	ENTERPRISE(97.07~02.10)	0K95B 3328Z		SP1145	HP1030				
FPK24	FRONT (PAD)	KIA	RIO SF1.3	RIO SF1.3(13")(02.06~05.03)	58115 FDA00		SP1164	HP1022	D1515-8724			○
FPK25	FRONT (PAD)	KIA	K7(CADENZA)	NEW CARENS(RONDO)(06MY)(06.04~) K7(CADENZA)(09.12~) YF SONATA 2.4 (09.09~) LF SONATA 16"(14.03~) TUCSON IX 4WD(09.08~) TUCSON IX 2WD(12.01~) SPORTAGE R 4WD(10.03~) SPORTAGE R 2WD(11.02~) I-40(12.01~)	58101 0ZA00 58101 1DA00 58101 1DE00 58101 2SA50 58101 2SA51 58101 2SA70 58101 3RA00 58101 3RA55 58101 3RA60	58101 1DA50 58101 1ZA00 58101 D7A50 58101 3RA50 58101 3SA30 58101 E8A00 58101 3ZA61 58101 3ZA00 58101 C2A10 58101 C2A20	SP1196		D1295-8614 D1295-8412	24501 24502 24503		○
FPK25R	REAR (PAD)	KIA	NEW CARENS (RONDO)	NEW CARENS(RONDO)(06.04~)	58302 1DA00 58302 1DE00 58302 1DE01		SP1197		D1296-8413	24491 24492 24493		○
FPK26	FRONT (PAD)	KIA	MOHAVE(BOREGO)	MOHAVE(BOREGO)(08.01~)	58101 2JA00 58101 2JA10		SP1248		D1385-8493			○
FPK27	FRONT (PAD)	KIA	K5(NEW OPTIMA) 15"	K5(NEW OPTIMA) 2.0 (10.05~) LPG TYPE	58101 2TA00		SP1397					○
FPK28	FRONT (PAD)	KIA	K5(NEW OPTIMA) 16"	K5(NEW OPTIMA) 2.4 (10.05~) K5(NEW OPTIMA) 2.0 GDI (~17")(11.07~) K5(NEW OPTIMA) TURBO (~17") GRANDEUR(AZERA) HG(16")(11.02~)	58101 3QA10 58101 3QA50 58101 3VA50	58101 2TA50 58101 4UA00 58101 3VA60	SP1398		D1444-8595	25644 25645 25646		○
FPK29 (FPH18)	FRONT (PAD)	KIA	SORENTO R 09MY	NEW SANTAFE 06MY, 12MY(05.11~) CHAIRMAN H(10.01~) SORENTO R(09.04~) KORANDO C(11.02~) MAXCRUZ(13.03~) GENESIS COUPE 2.0/3.8 V6 08" REXTON G4 (17.08~)	58101 0WA00 58101 2WA00 58101 2BA00 58101 2BA10 58101 2BA20 58101 2PA00 58101 2PA70 58101 2S500 58101 4DU00	58101 2WA70 58101 2WA90 58101 2JA11 48130 341A0 48130 340A0 48130 113A0 48130 36A00	SP1194		D1202-8322 D1202-8400 D1384-8400	24351 24352 24568 24569		○
FPK30	FRONT (PAD)	KIA	K9 3.3	K9 3.3(12.03~) ALL NEW CARENS (13.03~) GRANDEUR(AZERA) HG 12MY(12.01~) ASLAN 15MY	58101 3TA10 58101 A4A01 58101 3VA90	58101 3VA70 58101 3TA50 58101 4ZA00	SP1545 SP1424					
FPK30R	REAR (PAD)	KIA	K9 3.3	K9 3.3(12.03~)	58302 3MA30		SP1546		D1551-8761			

FRIXA CODE	POSITION	MAKER	REPRESENTATIVE MODEL	INTERCHANGEABLE	PARTS NO.		SP NO.	HP NO.	FMSI NO.	WVA NO.	TRW	E-MARK (E90)
FPK31	FRONT (PAD)	KIA	ALL NEW CARNIVAL F		58101 A9A00 58101 A9A10		SP1688					
FPK32	FRONT (PAD)	KIA	ALL NEW SORENTO F		58101 C5A00	58101 C5A70	SP1690					
FPK32R	REAR (PAD)	KIA	ALL NEW SORENTO R		58302 C5A00		SP1691					
FPK33	FRONT (PAD)	KIA	ALL NEW K7	GRANDEUR IG	58101 F6A10		SP1986					
FPK33R	REAR (PAD)	KIA	ALL NEW K7	GRANDEUR IG	58302 F6A00		SP1987					
FPK34	FRONT (PAD)	KIA	ALL NEW MORNING 17MY 13"		58101 G6A00		SP1982	HP0058				
FPK34R	REAR (PAD)	KIA	ALL NEW MORNING 17MY		58302 G6A00		SP1975	HP1060				
FPK35	FRONT (PAD)	KIA	ALL NEW MORNING 17MY 14"		58101 G6A30		SP1983	HP0059				
FPS01	FRONT (PAD)	RENAULT SAMSUNG	SM-5	518/520/525(98.~05.03) INFINITI G20 99MY INFINITI G20 01MY INFINITI G20 02MY INFINITI I30 96MY INFINITI I30 01MY NISSAN 180 SX 91MY NISSAN 200 SX 91MY NISSAN 350 Z 03MY NISSAN ALTIMA 95MY,02MY,07MY NISSAN BLUEBIRD IV 93MY NISSAN CUBE 09MY NISSAN MAXIMA(J30) 88MY,01MY NISSAN MAXIMA WAGON 01MY.97MY NISSAN MAXIMA QX 95MY NISSAN SENTRA 00MY	41060 2Y090 41060 2Y091 41060 2Y991 41060 40U90 41060 40U92 41060 5Y790 41060 88E87 41060 88E90 41060 88E91 41060 88E94 41060 89E90 41060 89E91 41060 8J090 41060 AU091 41060 ZG225	48111 51110K0 48111 51100K0 48111 51900K0 AY040 NS101 AY040 NS103 AY040 NS111 AY040 NS118 AY040 NS119 AY040 NS128 D1060 EM30C	SP1107-F	HP3001	D430-7832 D653-7318 D815-7318 D815-7783 D815-7832	21561 21562 21633	GDB1003	
FPS01NR	REAR (PAD)	RENAULT SAMSUNG	SM-5 02MY R	SM-5 02MY(02.07~05.03)	44060 4U092 44060 6Y390 44060 6Y391 44060 AU090 44060 AU091 55800 60J00 55800 60J10	48311 52001K0 F1Y12643Z F1YA2343Z F1YA2348Z F1YA2643Z F1YA2648Z	SP1163	HP3003	D900-7777 D1008-7912 D1008-8313	24039 24040 24041		
FPS01R	REAR (PAD)	RENAULT SAMSUNG	SM-5 R	518/520/525(98.~05.03) INFINITI G20 (P10) 90",95"99",01",02" INFINITI I30 96",01" NISSAN 100NX(B13) 90" NISSAN ALMERA / PULSAR (N15) 98" NISSAN ALMERA / PULSAR (N15) 96 NISSAN ALMERA / PULSAR (N15) 98 NISSAN ALMERAII / PULSARII (N16) 00" NISSAN ALTIMA 95" NISSAN BLUEBIRD IV 93" NISSAN MAXIMA QX 00" NISSAN SUNNY III 86",93"	48311 51110K0 44060 0N690 44060 4U090 44060 6E390 44060 73C91 44060 75C90 44060 7E690	48311 51100K0	SP1107-R	HP3002	D540-7533	21713 21714 21715	GDB1172	
FPS02	FRONT (PAD)	RENAULT SAMSUNG	SM-3	SM-3(02.~09.06)	1N17 33 28Z 41060 4M490 41060 6N091 41060 6N0X1 41060 95F0A 48111 31100K0	AY040NS072 AY040NS073 AY040NS084 AY040NS096 AY040NS100 AY040NS108 D1060 6N091	SP1156	HP3004	D1193-8311	24647 24648 24649	GDB7043	○

FRIXA CODE	POSITION	MAKER	REPRESENTATIVE MODEL	INTERCHANGEABLE	PARTS NO.		SP NO.	HP NO.	FMSI NO.	WVA NO.	TRW	E-MARK (E90)
FPS03	FRONT (PAD)	RENAULT SAMSUNG	SM-7	NEW SM-5(LATITUDE) (05.04~10.12) SM-7(05.04~11.07)	48111 52100K0	48311 52110K0 48311 52110K1 48311 52110K2	SP1183	HP3005				
FPS03R	REAR (PAD)	RENAULT SAMSUNG	SM-7	NEW SM-5(LATITUDE) R(05.04~10.12) SM-7 R(05.04~11.07) INFINITI FX(S50) 03MY R INFINITI FX35 03MY,06MY INFINITI FX45 03MY,06MY INFINITI G35 03MY,05MY,06MY,07MY R NISSAN 350Z 3.5 03MY,06MY NISSAN 350Z 3.5GT 06MY NISSAN ALTIMA 2.5/3.5 V6 02MY NISSAN ALTIMA SE-R 06MY NISSAN MAXIMA WAGON 04MY NISSAN MURANO(Z50) 03MY NISSAN QUEST 04MY NISSAN X-TRAIL 01MY	44060 8H385 44060 AL585 44060 AL586 44060 AM485 44060 CB10J 44060 EG00J 44060 EG00K 44060 EG085 48311 52000K0 D4060 8H385 D4060 EG50C	44060 AL588 D4060 9N00C D4060 EM11A D4060 JA00A D4060 JA00J 48311 52100K0 48311 52000K0 48311 52001K1 D4060-9HM0A	SP1184		D1393-8501 D1415-8405 D905-7784	23814 23871 23872 24088	GDB3294	
FPS04	FRONT (PAD)	RENAULT SAMSUNG	QM-5	QM-5(07.12~)	41060 0V790 41060 CC090 41060 CC093 41060 EB325 41060 AR090	D1060 1NC0A D1060 EG51A 41060 0771R AY040NS058 D1060 EJ20A 41060 0013R	SP1249		D888-7766 D888-8221	23698 23699 24497		
FPS04R	REAR (PAD)	RENAULT SAMSUNG	QM-5	QM-5(07.12~)	41060 1408R	D4060 1BN0A D4060 CY025 D4M60 EG50C	SP1250					
FPS05	FRONT (PAD)	RENAULT SAMSUNG	NEW SM-3	NEW SM-3(09.07~) QM-3(13.12~)	44060 3905R	41060 00Q1B 41060 00Q1C 41060 5961R 41060 7115R 44060 7115R	SP1390		D1627-8844	24914	GDB1789	○
FPS05R	REAR (PAD)	RENAULT SAMSUNG	NEW SM-3 R	NEW SM-3(09.07~) SM6(16.03~)	44060 2070R	44060 6418R 44060 2652R	SP1391		D340-7234 D340-7234 D894-7773 D1017-7920 D1023-7773 D1112-8216	20261 20960 23554	GDB1196 GDB1330	○
FPS06	FRONT (PAD)	RENAULT SAMSUNG	NEW SM-5 11MY	NEW SM-5(LATITUDE) 11MY(11.01~)	41060 1605R	41060 2Y990 D1060 1KA1A	SP1107-FA		D815-7318	24280 24281 24282		
FPS06R	REAR (PAD)	RENAULT SAMSUNG	NEW SM-5 R	NEW SM-5(LATITUDE) 11MY(11.01~) ALL NEW SM-7(11.08~)	44060 2154R	44060 8281R	SP1396		D1757-8985	25265 25266		
FPS07	FRONT (PAD)	RENAULT SAMSUNG	ALL NEW SM-7	ALL NEW SM-7(11.08~)	41060 0311R 41060 7585R	41060 0032R 41060 2933R 44060 0011R 44060 0032R 41060 2309R	SP1516					
FPS08	FRONT (PAD)	RENAULT SAMSUNG	SM-3 13MY		41060 8736R		SP1687					
FPS08R	REAR (PAD)	RENAULT SAMSUNG	SM-3 13MY		44060 4694R	44060 1416R 44060 3734R	SP1839			24820		
FPS09	FRONT (PAD)	RENAULT SAMSUNG	ALL NE SM-7 14MY		41060 3152R		SP1778					
FPS10	FRONT (PAD)	RENAULT SAMSUNG	SM-6		41060 7018R		SP1704					

FRIXA CODE	POSITION	MAKER	REPRESENTATIVE MODEL	INTERCHANGEABLE	PARTS NO.		SP NO.	HP NO.	FMSI NO.	WVA NO.	TRW	E-MARK (E90)
FPS10R	REAR (PAD)	RENAULT SAMSUNG	SM-6 EPB		44060 7082R		SP1903					
FPS11	FRONT (PAD)	RENAULT SAMSUNG	QM-6		41060 7185R		SP1714		D1736-8906	25910 25911 25912		
FPS11R	REAR (PAD)	RENAULT SAMSUNG	QM-6		44060 3981R		SP4140		D1965-9190			
FPY01	FRONT (PAD)	SSANGYONG	ISTANA	ISTANA(95.~03.06)	66142-03021		SP1083	HP4003			GDB7614	
FPY02	FRONT (PAD)	SSANGYONG	MUSSO	MUSSO, MUSSO SPORTS(97.12~08.08) KORANDO FAMILY(88.10~99.10) NEW KORANDO(96.07~05.12)	48130 05000 48130 05010 48130 05011 48130 05012		SP1065	HP4001	D887-7765	21757	GDB3101 GDB3169 GDB3211 GDB3256 GDB3283 GDB3365 GDB7521 GDB895	
FPY03	FRONT (PAD)	SSANGYONG	REXTON	REXTON(01.~03.12)	48130 08050 48130 08150 48130 08152	48130 08050 48130 08150 48130 08151 48130 08152	SP1144	HP4004		21725 21726 21727		
FPY03R	REAR (PAD)	SSANGYONG	REXTON R	MUSSO(97.12~08.08) CHAIRMAN H(08.02~11.06) NEW KORANDO(96.07~05.12) KYRON(05.06~11.12) ACTYON(05.10~10.12) REXTON(01.09~) KORANDO C SPORTS(12.01~)	48413 090A0 48413 090A1 48450 113A0	48413 05100 48413 05102 48413 08050 48413 08051	SP1151	HP4002		23673 23674 23675 24050 24051 24052	GDB3382	
FPY04	FRONT (PAD)	SSANGYONG	CHAIRMAN	CHAIRMAN, NEW CHAIRMAN(97.07~08.03)	48150 110A2		SP1088	HP4005				
FPY04R	REAR (PAD)	SSANGYONG	CHAIRMAN R	CHAIRMAN, NEW CHAIRMAN(97.07~08.03)	48450 110A0		SP1089					
FPY05R	REAR (PAD)	SSANGYONG	RODIUS(STAVIC) R	RODIUS(STAVIC)(04.06~) KYRON IRS(05.06~11.12) ACTYON IRS(05.10~10.12) KORANDO TURISMO(13.03~)	48413 091A0 48413 091A1 48413 21A10 58302 3EU00 58302 4DU00	48416 21A20 58302 3EU01 48413 21B10	SP1173		D954-7853	23931 23932 23933	GDB3413	○
FPY06	FRONT (PAD)	SSANGYONG	KYRON	KYRON(05.06~11.12) NEW REXTON(06.04~) ACTYON(05.10~10.12) KORANDO C SPORTS(12.01~)	48130 08250 48130 08260 48130 090A0 48130 091A0 58101 26A40	48130 090A2	SP1171	HP4007	D903-7739 D955-7854	23569 23570 23571	GDB3244	
FPY07	FRONT (PAD)	SSANGYONG	CHAIRMAN W		48130 140B0		HP1251					
FPY08	FRONT (PAD)	SSANGYONG	TIVOLI		48130-350A0		SP1761					

Distributed by Hankook driving emotion

FRIXA BRAKE SYSTEM

FRIXA BRAKE SYSTEM *FOREIGN VEHICLES(PAD)*

FRIXA CODE	POSITION	MAKER	REPRESENTATIVE MODEL	INTERCHANGEABLE	PARTS NO.		SP NO.	HP NO.	FMSI NO.	WVA NO.	TRW	BENDEX (DB NO.)	TEXTAR	E-MARK (E90)
FPE011	FRONT (PAD)	TOYATA	CROWN	GBS12,GXS1(01.08~07.06) DBA-TSS10H(08.08~)	04465-22040 04465-22050 04465-22060 04465-22090 04465-22180 04465-22220 04465-43010 04465-43020 04465-43030 04465-YZZ55 04491-22260 04491-22270 04491-22280 04491-22290 04491-22310 04491-22311 04491-22330 04491-22331 04491-22340 04491-22350 04491-35230	AY040-TY005 AY040-TY006 AY040-TY041 AY040-MA-003 H260-33-28Z H260-33-28ZA H260-33-28ZB H260-33-625 H261-33-28ZA H330-33-28Z H722-33-23Z H722-33-23ZA H722-33-28Z H722-33-28ZA HE21-33-28Z HE21-33-28ZA HE21-33-28ZB V9118X026 H330-33-28ZA	SP1060-FB	HP5228 HP8248 HP8282	D433-7320 D589-7320 D433-7548 D433-7500 D389-7276	21318 21538	GDB7181	DB1141		
			COMFORT	SXS11Y(96.04~01.08) GXS10,YXS1(95.12~97.01) YXS11Y,SXS(96.04~) GBS12,GXS1(01.08~) LXS11(95.12~97.01) LXS11Y(96.04~99.01)										
			CROWN COMFORT / TAXI	GXS10(95.01~96.01) SXS13Y(01.01~08.08) YXS10AE,LX(95.01~07.06)										
			CRESSIDA(EURO)	(89.01~92.10)										
			MARK Ⅱ /CHASER / CRESTA	SX80, YX80, GX81(88.08~95.12) LX80(88.08~93.08) JZX81(90.08~93.12) MX83(88.08~93.02)										
			TACOMA(USA)	Pick-up TRUCK(04.01~06.12)										
		MAZDA	LUCE	HCEP, HCFS(86.09~91.04) HC3S,HCSS(86.09~92.03)										
FPE012	FRONT (PAD)	NISSAN	CREW	HK30,QK30,SK30,TSK30(93.07~96.09) THK30,YHK30(94.01~96.09) THK30,YHK30,SK30,TSK30(96.09~02.08) HK30,QK30(96.09~)	41000-10G08 41060-08N90 41060-08N91 41060-08N92 41060-09G90 41060-23C90 41060-V7085 41060-V7090 41080-09G27	AY040-NS013 AY040-NS014 AY040-NS016 D1060-3S591 D1060-57G90 D1060-V7090 D1060-V7092 D1060-VL32A D1060-VL33A D106M-57G90	SP1140	HP8374	D1144-7433 D554-7433 D333-7228	21347 21348 21349	GDB1017 GDB766	DB438		
			CEDRIC / GLORIA	NJY31,TNJY31(87.06~91.06) TY31,Y31,CUY31,UY31,UY3,PAY31(87.06~02.08) CY31(89.06~99.08) QJY31(91.06~07.07) Y32,YY31(91.06~95.08) CMJY31,MJY31(98.06~02.08)										
			ATLAS CONDOR	SK2F23,SN2F23,SN4F23,SN6F23(95.06~99.06) SH2F23(99.06~02.06) SM6F23(92.10~95.06) SP2F23,SP4F23,SP6F23(99.06~04.08)										
			CARAVAN / HOMY	KSE24,KSGE24(86.09~90.10) KHE24,KHGE24(86.09~95.08) DTGE24,FTGE24(92.10~93.05) CGE24,CTGE24,VTE24,VTGE24(92.10~99.06) VRMGE24,CRMGE2(87.10~92.10)										
			CIMA	FPAY31,FPY31(88.01~91.08)										
			DATSUN TRUCK	LPD22,PD22,QD2,LFMD22,BD22,LBD22,LRMD22 (97.01~02.08) LFD22(99.06~02.08) BMD21(92.08~97.01)										
			FRONTIER	(98.01~06.06)										
			KING CAB	D21(92.05~98.01)										
			MISTRAL	KR20,R20(94.06~98.07)										
		ISUZU	ELF	ASK2F23,ASN2F23,ASN6F23(95.06~99.06) ASH2F23(99.06~07.06) ASP2F23,ASP6F2(99.06~04.05)										
			FARGO	JVTGE24(96.08~99.06) JARE24,JARME24,JCRGE24,JVRGE2(95.08~97.05) JKRGE24,,JKRMGE,JFEGE24(95.08~99.06) JCEGE24(99.06~01.05) JCWGE24,JVWE24,JVWGE24,JVWMGE(96.08~99.06)										

FRIXA CODE	POSITION	MAKER	REPRESENTATIVE MODEL	INTERCHANGEABLE	PARTS NO.		SP NO.	HP NO.	FMSI NO.	WVA NO.	TRW	BENDEX (DB NO.)	TEXTAR	E-MARK (E90)
FPE013	FRONT (PAD)	TOYOTA	MARK Ⅱ /CHASER / CRESTA	GX110,GX110W,JZX110,JZX110W(00.10~07.06)	04465-30300 04465-30280	AN-636K	SP1566		D1733-8957		GDB3316		2352601	
			CROWN ESTATE	(01.01~03.01)										
			CROWN	GS171,GS171W,JZS171,JZS171W,JZS175,JZS175W (99.09~03.012) JKS175(01.08~07.06)										
			ALTEZZA	GXE10,SXE10,GXE10W, JCE10(01.05~05.07)										
			BREVIS	JCG10,JCG11(01.05~07.06)										
			MARK X	GRX120,GRX125,GRX121(04.11~)										
			PROGRES	JCG10,JCG11(01.04~07.06)										
			VEROSSA	GX110,JZX110(01.06~04.04)										
FPE014	REAR (PAD)	TOYOTA	CROWN	GS171,GS171W,173W,JZS173,JZS171,JZS171W,JZS171,JZS 171W,JZS179,JZS175,JZS175W(99.09~03.12) JZS177,UZS171,175,UZS173(99.09~04.06) JKS175(01.08~07.06)	04466-22180 04466-30120 04466-30121 04466-30122 04466-30150 04466-30151 04466-30161	04466-30110 04466-30130 04466-30160 04466-30170 04466-30190 04466-51010 04466-51011 04466-51020	SP1554	HP5083	D771-7638	21790 23429	GDB3233	DB1416	2342901	
			PROGRES	JCG10,JCG15(98.05~07.06) JCG11(98.05~07.06)										
			ALTEZZA	GXE10,SXE10(98.10~05.07) GXE10W, JCE10,JCE10W,JCE15W(01.06~05.07) GXE15W(02.01~05.07)										
			ARISTO	JZS160/161(97.08~04.11)										
			BREVIS	JCG10,JCG11,JCG15(01.05~07.06)										
			CROWN ESTATE	(99.01~04.05)										
			MARK Ⅱ /CHASER / CRESTA	GX115,GX115W,GX110,GX110W,JZX115,JZX115W,JZX110,J ZX110W(00.10~07.06)										
			SOARER	UZZ40(01.04~05.07)										
			VEROSSA	GX110,GX115,JZX110(01.06~04.04)										
FPE015	FRONT (PAD)	DAIHATSU	HIJET	S100V,S110V,S100W,S110W,S120V,S130V (94.01~98.12) S140V(97.09~98.12) S200V,S210V(98.12~) S200W,S210W(00.01~04.11) S221V,S231V(01.07~04.11)	04491-97502-000							GDB7176		
			ATRAI	S200W,S210W(00.01~05.01) S220V,S230V(98.12~00.05) S220G,S230G(99.05~04.12) S221G,S231G(00.07~02.06)										
			HIJET GRAND CARGO	S221V,S231V(01.07~)										
FPE016	FRONT (PAD)	ISUZU	ELF	NKR66,NPR66,NKR71,NPR71,NPR72,NPR75(99.04~) NKR81(02.04~) NPR81(02.06~) NKR72(00.02~) NPS72L,NPS72PA(02.10~)	8-97203209-0							GDB7241		
FPE017	FRONT (PAD)	MITSUBISHI	CANTER	FE70B,FE72B,FE71B,FE88D(04.04~) FE70C,FE71C,FE72C,FE73C,FE82C,FE83C,FE72E,FE78E, FE70E,FE71E,FE82E,FE83C,FE88E,FG70E,FG72E,FG82E, FG88E(02.05~04.08) FG70D,FG72D,FG82D,FG88D,FG70D,FE84D(04.07~) FE82D(02.06~) FE70D,FE71D,FE72D,FE78D(04.02~)	MK449107 MK529355	MK529948						GDB7243		2924001	

FRIXA CODE	POSITION	MAKER	REPRESENTATIVE MODEL	INTERCHANGEABLE	PARTS NO.		SP NO.	HP NO.	FMSI NO.	WVA NO.	TRW	BENDEX (DB NO.)	TEXTAR	E-MARK (E90)
FPE06	FRONT (PAD)	NISSAN	PRIMERA	QP12(02.02~05.12) HNP11,HP11,WHNP11,WHP11(97.09~01.01) WTP12,WTP12,WTNP12(01.01~07.12) WHP12,WRP12,TNP12,TP12(01.08~05.12) HP12,RP12(01.01~07.07)	AY040-NS106	41060-AU091	SP1107-FA SP1183	HP8347 HP5140	D815-8530	24280 24281 24282	GDB3390	DB1485		
			STAGEA	WHC34,WGC34(96.05~01.10) M35,NM35(01.10~02.04) HM35(01.10~04.08)										
			TEANA	J31,TNJ31,PJ31(03.02~08.06)										
			MAXIMA	E-J30(HJ30)(88.10~91.08) CA33(00.01~02.12) A33(01.01~03.12)										
			ALTIMA	(02.01~05.01)										
			CEDRIC / GLORIA	LNA31,RCA31,NA31(90.08~94.08) HA31,HCA31,LA31,RA31,RAC31(88.09~94.08) A32,A33,WA32(94.08~98.12) EA31,ECA31(92.06~94.08)										
			VERSA	JC11,Hatchback(07.01~)										
			CUBE	DBA-Z12(10.03~)										
			FAIRLADY Z	VQ35DE(03.01~)										
			AVENIR	W11(98.08~05.09) VSW10(90.05~93.12) SW11(98.08~00.05) PNW11,PW11(98.08~02.08) RNW11,RW11(02.08~05.09)										
FPE018	FRONT (PAD)	TOYOTA	HIACE REGIUS	(03.08~07.08)	04465-26420 04465-26421		SP1376	HP9155	D1434-8552	24680	GDB3485		2468001	
			HIACE	TRH200K,200V,TRH214W,219W,TRH221W,226W,TRH223W,228W,LH222,TRH224W,229W(04.08~) KDH200,205,220,225,222(04.08~07.09) TRH211K,216K,KDH201K,201V,KDH206K,206V,KDH211K,221K,KDH223B,228B(07.09~)										
FPE019	FRONT (PAD)	TOYOTA	CAMRY / VISTA	ACA31,ACV31,MCV30(01.08~06.01) ACV35,ACV30(01.09~06.01)	04465-30340 04465-33240 04465-33250 04465-33260 04465-33320 04465-33340	04465-44140 04465-68010 04465-06030 04465-YZZDZ 04465-33246	SP2037	HP5053	D908-7787 D1052-7787	23806 23928	GDB3314	DB1462	2392801	
			CROWN	GRS180,181,GRS182(03.12~08.02) GRS200,201(08.02~) UZS186,UZS187(04.06~08.02)										
			MARK X	GRX120,GRX121(04.11~)										
			WISH	ZNE14G,ZNE10G,UA-ZNE14G(03.01~08.01) ANE10G,ANE14G(03.04~08.01) CBA-ANE11W(04.01~09.04)										
			ISIS	ZNM10G(W),ANM10G(W),ANM15G(W)(04.09~)										
			KLUGER V	MHU28W(05.03~07.05)										
FPE020	FRONT (PAD)	TOYOTA	CROWN	GRS180,GRS182(03.12~) GS171,GS171W,JZS171,JZS171W,JZS175,JZS175W(99.09~03.12) JKS175(01.08~07.06)	04465-30330	04465-30480			D817-7691	23526 23864	GDB3316		2386401	
			MARK X	GRX120,GRX125,GRX121(04.11~)										
			ALTEZZA	GXE10,SXE10(01.05~05.07) GXE10W, JCE10(01.06~05.07)										
			BREVIS	JCG10,JCG11(01.05~07.06)										
			MARK Ⅱ /CHASER / CRESTA	GX110,GX110W,JZX110,JZX110W(00.10~07.06)										
			VEROSSA	GX110,JZX110(01.06~04.04)										

FRIXA CODE	POSITION	MAKER	REPRESENTATIVE MODEL	INTERCHANGEABLE	PARTS NO.		SP NO.	HP NO.	FMSI NO.	WVA NO.	TRW	BENDEX (DB NO.)	TEXTAR	E-MARK (E90)
FPE021	FRONT (PAD)	HONDA	ODYSSEY	RA6,RA7(99.12~03.10) RB1,RB2(03.10~08.10) RA8,RA9(00.01~03.10) DBA-RB3,DBA-RB4(08.10~)	45022-S0A-J20 45022-S0K-A00 45022-S0K-A01 45022-S0K-A11 45022-S3N-000 45022-S3V-A11 45022-S6E-E50 45022-S7A-N00 45022-SAA-G00 45022-SDB-A10 45022-SDD-A00 45022-SDD-A10 45022-SEA-J00 45022-SEA-J01 45022-SEA-J11 45022-SEP-A01 45022-SEP-H00 45022-SFE-J10	06450-S0K-J01 06450-S0K-J02 06450-S3N-J00 06450-S7A-D01 06450-S7A-E00 06450-S7A-E50 06450-S7A-N00 06450-SDD-A00 06450-SDD-A10 06450-SEA-J00 06450-SEA-J01 06450-SEA-J10 06450-SEP-A00 06450-SFE-J10 06450-SFE-J20 06450-SJK-010 06450-SNB-000 H4502-SDD-000	SP2012 (SP2012A, SP2012B)	HP5085 HP8145	D959-7857 D1276-8392 D1608-8329	23722 23729 24053 24054 24055	GDB3240 GDB3268 GDB7182 GDB7634	DB1393 DB1515	2372901	○
			ACCORD	CL8,CL7(02.10~) CL1(00.06~02.10) CL9(02.10~08.12) CD5,CD6(99.11~02.10) CM2,CM3(02.11~) CU2,CW2(08.12~)										
			AVANCIER	TA2(99.09~03.07) TA4(00.02~03.07)										
			CIVIC	VII(05.09~) DBA-FD1(05.09~09.12) DBA-FD2(06.04~09.12)										
			CROSSROAD	DBA-RT1,DBA-RT2,DBA-RT3,RT4(07.02~)										
			EDIX	BE3,BE4(04.07~06.12) DBA-BE3(04.01~06.12) DBA-BE8(06.12~)										
			INSPIRE/ VIGOR/ SABER	UC1(03.06~07.12) UA5(98.10~03.06) CP3(07.12~)										
			INTEGRA	DC5(04.09~)										
			LEGEND	KA9(98.10~04.10)										
			STEP WAGON	RG1,RG2,RG3,RG4(05.05~)										
			STREAM	RN1(03.09~06.07) RN7,RN6,RN8,RN9(06.07~) RN3(00.10~06.07) RN4(01.01~06.07) RN5(03.12~06.07)										
			TORNEO	CL1(00.06~02.10)										
FPE022	FRONT (PAD)	TOYOTA	HARRIER	ACU30W,ACU35W(03.02~06.01) MCU30W,MCU35W,MCU31W,MCU36W(03.02~06.06) MCU38W(05.03~09.04) GSU30W,35W,GSU31W,36W(06.01~)	04465-48100 04465-48110	04465-0W070 04465-48080 47746-0W050-00 47746-0W070-00	SP1456	HP5166	D1005-7906	23734 23989	GDB3338 GDB3397	DB1517	2373401	
		LEXUS	RX300	MCU35,MCU38(03.04~09.12)										
			RX330	MCV/GSU(04.01~06.01)										
			RX350	MCV,GSU,GYL(07.01~09.12)										
			RX400H, RX450H	MHU33/38(06.01~08.12) GLV10/15,16W(09.01~10.12)										
FPE023	FRONT (PAD)	PEUGEOT	405		425055 4250.95 4251.07	425078 425087 425135 425270	SP1180	HP5055	D454-7334	21208 21209 21210 23169 23170	GDB793 GDB1039 GDB1051	DB1258	2120909	○
FPE024	FRONT (PAD)	PEUGEOT	206 1.4		4252.12 4252.28 4253.02 4253.03 4253.20	4254.94 E172131	SP1179	HP5047 HP8386	D1143-8254 D2056-9289	23597 23598	GDB1361 GDB1500		2359703	○

FRIXA CODE	POSITION	MAKER	REPRESENTATIVE MODEL	INTERCHANGEABLE	PARTS NO.		SP NO.	HP NO.	FMSI NO.	WVA NO.	TRW	BENDEX (DB NO.)	TEXTAR	E-MARK (E90)
FPE 024N	FRONT (PAD)	PEUGEOT	206 1.6		4252.18 4252.21 4252.38 4252.59 4252.76 4253.30 4253.38 4254.23 4254.75 4254.86	1610489680 1611293980 1612293980 1613192280 1614005880 E172124 E172227 E172558	SP1241	HP5272 HP9606	D1213-8333	23599 23954 24101	GDB1463		2395401	○
FPE 024NR	REAR (PAD)	PEUGEOT	206 1.6		4250.71 4251.04 4251.46 4251.48 4251.96 4251.97 4252.56 4252.57 4252.71 4252.74 4253.11	4254.42 4254.90 95659341 95666971 7701202210 7701202308 7701202662 7701204626 7701204664 7701204845 7701207034		HP5287	D1458-8658 D1482-8658	20973 20974 20634	GDB1305		2097401	○
FPE025	FRONT (PAD)	NISSAN	VANETTE	SK82LN(MN,TN,VN)(99.06~04.03) SK82LN(TN,VN),SKF2LN(MN,TN,VN)(04.03~) SKF2LN(MN,TN,VN)(03.12~04.03) S21(03.03~) SK22LN(MN,TN,VN)(99.06~03.12)	AY040-MA010 4605A041 4605A471 MN116445 MR407422	MZ690340 MZ690177 MZ690347 MZ690347C MR527868	SP2075	HP8264 (HP5134, HP9187)	D867-7742	23288 24066	GDB3246		2348801	○
		MAZDA	BONGO											
		MITSUBISHI	CHALLENGER	NA4W(03.05~)										
			GRANDIS	DBA-NA4W(03.01~05.05)										
			PAJERO	ADC-V98W(06.10~) KH-V68W,TA-V65W(00.08~05.11)										
			PROUDIA	S32A,S33A,S43A(00.02~01.05)										
FPE026	FRONT (PAD)	DAIHATSU	HIJET	S100C,S110C,S100P,S110P(94.01~98.12)	04491-87506-000						GDB7022			
FPE027	FRONT (PAD)	SUBARU	SAMBAR	TT1,TT2,TV1,TV2,TW1,TW2(99.01~04.08)	26296-TC050			HP9306						
		SUZUKI	SWIFT	SA310A(97.01~00.06) SF413M(97.01~01.05) SF416(97.01~00.02)										
			CULTUS	SF310AA,SF310MA(98.04~01.01) SF413MA(98.04~01.05)										
FPE028	FRONT (PAD)	HONDA	LIFE	JA4(97.05~98.10) JB1,,JB2(98.10~03.09) JB5,JB6(03.09~)	45022-S2K-000	06450-S3A-J00	SP1609				GDB7090			
			ACTY	HA1,HA2,HH1,HH2(88.05~90.02) HH3,HH4,HA3(90.02~99.06) HA4,HA5(90.02~99.07) HA6,HA7(99.05~) HH5,HH6(99.06~)										
			VAMOS	HM1,HM2(99.05~03.04) HJ1,HJ2,HM3,HM4(03.04~)										

FRIXA CODE	POSITION	MAKER	REPRESENTATIVE MODEL	INTERCHANGEABLE	PARTS NO.		SP NO.	HP NO.	FMSI NO.	WVA NO.	TRW	BENDEX (DB NO.)	TEXTAR	E-MARK (E90)
FPE029	FRONT (PAD)	SUZUKI	ALTO	HA12S,HA12V(98.10~00.12) HA22S(98.10~02.04) HA23S(00.12~04.09) HA23V(00.12~05.01) HE21S(02.05~05.01) HA24S(04.09~09.12) HA24V(05.01~09.12)	1606225680 4605A954	55810-76G03 55810-76G02 55810-76G01 55810-76G00	SP1592		D1225-8344	24423 25231 23230			2442302	○
			KEI	HN11S(98.10~01.04) HN21S,22S(98.10~03.04) HN22S(01.04~)										
			WAGON R	MC11S/12S(98.10~00.12) MC21S/22S/MF21S(98.10~03.12) MH21S(03.09~05.09)										
FPE030	FRONT (PAD)	HONDA	ACCORD	CE7(96.01~98.12) CC7,CE8(93.01~98.12) CF4,CF5(97.08~02.10) CL3(00.06~02.10) CE2(94.01~97.10) CD9(95.01~98.12) CG4(98.01~02.10) CB8,CB9,CE1(90.01~98.12) CD6(93.09~97.09) CE9(96.01~98.12) CH1(98.10~02.12) CG2(98.01~03.06) CD7,CD8(94.02~96.12) CF2(96.08~97.0	45022-S10-A00 45022-S10-E50 45022-S10-G01 45022-S10-G02 45022-S1A-E20 45022-S1A-E70 45022-S1A-E71	45022-S30-A00 45022-S30-A02 45022-S30-E50 45022-ST7-R00 45022-ST7-R02	SP1076-F	HP5009	D503-7382	21651 21652 21653	GDB3177 GDB3188 GDB3196 GDB995	DB1206	2165101	○
			ODYSSEY	RA1,RA2(94.09~97.09) RA3,RA4(97.07~99.12) RA5(97.10~00.01)										
			STEP WAGON	RF1,RF2(96.04~01.04) RF3,RF4(01.04~05.10) RF5,RF6,RF7,RF8(03.06~05.05)										
FPE031	FRONT (PAD)	ISUZU	ELF	NKR69,WKR69(93.07~99.04) NHR69,NHS69,NKR(99.05~02.05) NHR69M,NHR69E,NHR69MA,NHR69(02.06~04.05) NHR69EV(03.08~) NHR69(N)(04.05~) NKR69EA, NHS69EA, NKR81EA, NKR81LAR(02.6~) VKR66K(96.11~02.05) NHS69EA(03.08~06.12) NHS69A(04.05~06.12) NKR58,NKR63,NKR66,VK	8-97078409-1 8-97078409-2 8-97078409-3 8-97078409-4 8-97172427 8-97226103 8-97226103-0 8-97318894 8-97368980-0 8-97368980	4106089TA2 4106089TA6 4106089TB9						GDB7087		
FPE035	REAR (PAD)	HONDA	ODYSSEY	RA1,RA2(94.09~97.09) RA3,RA4(97.07~99.12) RA5(97.10~00.01) RA6,RA7(99.12~03.10) RA8,RA9(00.01~03.10)	43022-SP0-020 06430-SED-E60 43022-S2A-000 43022-S7S-010 43022-S9A-A00 43022-S9A-E51 43022-S9A-E52	43022-SED-E60 43022-SV4-A20 43022-SV4-A22 43022-SX0-A50 43022-SX0-A51 43022-SX0-A52 43022-SZ3-A01	SP1076R	HP5164	D536-7418	23652 23653 23736	GDB1063 GDB3154 GDB3175 GDB3191 GDB3269 GDB3438 GDB774	DB1230		○
			STEP WAGON	RF1,RF2(96.04~01.04) RF3,RF4(01.04~05.10) RF5,RF6,RF7,RF8(03.06~05.05)										

FRIXA CODE	POSITION	MAKER	REPRESENTATIVE MODEL	INTERCHANGEABLE	PARTS NO.		SP NO.	HP NO.	FMSI NO.	WVA NO.	TRW	BENDEX (DB NO.)	TEXTAR	E-MARK (E90)
FPE036	FRONT (PAD)	SUZUKI	WAGON R	CT21S,CV21S(95.10~98.10) CT51S,CV51S(97.04~98.10)	55810-60FA3						GDB7125			
			ALTO	HA11S,HB11S,HC11V,HD11V(94.11~98.09)										
				CN22S,CP22S(97.05~98.06)										
FPE037	FRONT (PAD)	TOYOTA	VITZ	NCP91(05.02~)	04465-52240 04465-52270	04465-52310 04465-0D130	SP1588		D1628-8845	24708	GDB3460			
			VERTA	SCP92(05.11~)										
			YARIS	NCP93(06.01~)										
				SCP100,NCP100,NCP105(05.10~)										
FPE038	FRONT (PAD)	NISSAN	SERENA	C25,NC23(05.05~06.06) CC25,CNC25(06.06~) C25(05.05~)	AY040-NS137 D10601VA8E D1060EB70A D1060JR70A	D1060ZP00A D1M60CY70B 41060ZP00A	SP1460A	HP5173	8200-D1094	24227 24228	GDB3404			
			NAVARA	D40(06.10~09.11)										
FPE039	REAR (PAD)	TOYOTA	VITZ	NCP91(05.02~)	04466-12130 04466-12140 04466-12150 04466-47100 04466-52121 04466-52120	04466-52141 04466-52140 04466-52150 04466-52170	SP2094	HP5181	D1354-8463 D1423-8463	24610 24611 24612	GDB3454			○
			VERTA	SCP92(05.11~)										
			COROLLA											
			RACTIS	NCP100(05.10~)										
			AURIS	NZE151H,NZE154H,ZRE152H,ZRE154(06.10~) DBA-ZRE152H(09.05~)										
FPE040	REAR (PAD)	HONDA	STEP WAGON	RG1,RG2,RG3,RG4(05.05~)	06430-SFE-J00 43022-SFE-000 43022-SFE-N00		SP2104			25545 25546 25544	GDB7697			
			STREAM	RN6,RN7,RN8,RN9(06.07~)										
			ODYSSEY	RB1,RB2(03.10~08.10) DBA-RB3,DBA-RB4(08.10~)										
			ELYSION	RR1,RR2,DBA-RR3,RR4(04.05~) RR5,RR6(07.01~)										
FPE041	FRONT (PAD)	MITSUBISHI	LANCER	C61A,C62V,C74A,C64A(98.09~91.10) C11V,C12V,C12W,C72A,C32V,C14V,C14W,C34V,C34W, C37W(98.10~92.09) CB1A,CC3A,CD3A,CB2A,CB3A(91.10~95.10) CK1A(96.09~00.05) CM8A,CK8A(95.08~99.06) CK/P_A, CK4A(95.01~03.01)	04491-87401 04491-87401-000 MB928817 MR249779 MR389507 MR389508 MR389512 MZ690330	04465-B4010 04465-B4030 04465-B4040 04491-87403-000 DBP511114 MR249779 X3511001 MB699473	SP1142	HP5013 HP8224	D535-7417 D602-7482	21650	GDB1129 GDB3046 GDB3214	DB1277 DB1201	2165001	○
FPE042	FRONT (PAD)	MITSUBISHI	LANCER		MN116764 MR569225	MR569224 MZ690563 MZ690185 MN102878 MN116604	SP1255	HP5183	D904-7782	24291		DB1455		○

FRIXA CODE	POSITION	MAKER	REPRESENTATIVE MODEL	INTERCHANGEABLE	PARTS NO.		SP NO.	HP NO.	FMSI NO.	WVA NO.	TRW	BENDEX (DB NO.)	TEXTAR	E-MARK (E90)
FPE043	FRONT (PAD)	TOYOTA	COROLLA	NZE120,NZE121,NZE121G,NZE124,NZE124G,ZZE122(G),124(G),ZZE122(00.08~06.01) ZZE120(01.11~02.07) ZZE121(01.11~) CE121G,CE121(00.08~04.01)	04465 0W050 04465 13020 04465 12581	04465 13050 04465 47050	SP1232 SP1244	HP5019 HP8487	D990-7695	23904 23905 23906 23907	GDB3317	DB1422		○
			PRIUS											
FPE047	FRONT (PAD)	SUZUKI	CERVO	HG21S(06.11~)	55810-72J10		SP1548							
			EVERY	DA64V,DA64W(05.08~)										
			KEI	HN22S(01.04~03.09) CBA-HN22S(04.12~09.10)										
			CARRY	DA63T,DA65T(05.12~)										
FPE048	FRONT (PAD)	TOYOTA	COROLLA	CBA-ZZE122(04.02~06.01) ZZE120(02.06~)	04465-02080 04465-44050 04465-44060 04465-44090	04465-YZZCT	SP1373	HP5097	D923-7824	23836 23862	GDB3315	DB1487		
			AVENSIS	CTD225(01.05~02.11)										
			MATRIX	(04.01~)										
FPE053	FRONT (PAD)	HONDA	LIFE		45022-SFC-000									
FPE057	FRONT (PAD)	HONDA	CIVIC	CAPA HATCHBACK CIVIC COUPE CIVIC PRO CR-X DOMANI FIT ARIA INTEGRA LOGO ORTHIA CITY SEDAN	45022-S04-505 45022-S04-G00 45022-S04-G02	45022-SR3-G01 06450-SAA-E51 45022-504-G00	SP2032	HP5040	D1643-8870	21697 21698 21699	GDB1164	DB1262	2169701	○
		ISUZU	GEMINI											
FPE058	FRONT (PAD)	TOYOTA	COROLLA	CAMRY	04465-10040 04465-12010 04465-12020 04465-12040 04465-12090 04465-12490 04465-16010 04465-16031 04465-16040 04465-16070 04465-17021 04491-17070 04465-20030 04465-20080 04465-20160 04465-20180 04465-20300 04465-21010 0449110160 0449110161 0449110220 0449110240	0449110241 0449112170 0449112230 0449112231 0449112232 0449112240 0449112241 0449112250 0449112280 0449112281 0449112282 0449112290 0449112291 0449112292 0449112320 0449112321 0449112322 0449112323 0449112340 0449112341 0449112421 0449112422	SP1105	HP5020 HP8510	7152-D241 7153-D242 7420-D302 D539-7420	20870 21294	GDB3184 GDB323	DB308		

FRIXA CODE	POSITION	MAKER	REPRESENTATIVE MODEL	INTERCHANGEABLE	PARTS NO.		SP NO.	HP NO.	FMSI NO.	WVA NO.	TRW	BENDEX (DB NO.)	TEXTAR	E-MARK (E90)
FPE060	FRONT (PAD)	TOYOTA	COROLLA 2009	NZE141(06.01~08.01) NZE141G(06.01~) ZRE142(G),144(G)(06.01~)	04465-02220 04465-12610 04465-42160	04465-02240 04465-42200 04465-YZZDR	SP2093	HP5176	D1210-8330	24336	GDB3425	DB1802		○
FPE062	FRONT (PAD)	SUZUKI	CULTUS	AA44S,AB44S(88.09~98.06) AB34S,AF34S,AA34S,AB34S(88.09~00.05)	55200-61832 55200-62850 55200-62851	55200-62852 55210-60B50				21730	GDB3237			
FPE064	REAR (PAD)	TOYOTA	COROLLA REAR	ZZE120(02.01~06.10) ZZE121,CDE120(01.11~) ZZE122,123(G)(00.08~06.01) ZRE142, 144(06.10~)	04466-20090 04466-52010 04466-52020 04466-52030	04466-52040 04466-52050 04466-52060 04465-YZZD5	SP2044	HP5153	D823-7696	23521 23522 23523	GDB3243	1429		○
FPE079	FRONT (PAD)	NISSAN	SUNNY(1992-1995)	100NX, AD VAN, MARCH, PRESEA, PULSAR	41060-50Y94	41060-63C90	SP1489	HP5067	D510-7389	21657 21658 21659	GDB1012 GDB1170	1210		
FPE080	FRONT (PAD)	NISSAN	SUNNY(1996-2000)	ALMERA, CUBE, HYPER MINI, PRESEA, PULSAR, RASHEEN, WINGROAD	41060-1N060 41060-1N090	D1060-1N090	SP1122	HP5014 HP8328	D668-7546	23796 23004 23005 23006	GDB3156 GDB3180 GDB3275	1302		
FPE082	FRONT (PAD)	HONDA	CIVIC(1995-2000)		45022-SH1-505	45022-SH3-G10 45022-SH3-G11 45022-SH3-G12 45022-SH3-G13 45022-SH3-G14	SP1427	HP5056 HP8160	D474-7355 D273-7178 D560-7439	21330 21331 21332	GDB764	390 1259	2133001	
FPE083	FRONT (PAD)	HONDA	CIVIC(2001-2006)	DOMANI, EDIX, FREED, INTEGRA, MOBILIO, STREAM	45022-S5A-E50 06450-S5A-J00 06450-S5A-G00 06450-S5A-E50 45022-S04-E60 45022-S04-V10 45022-S04-V11 45022-S04-V12	45022-S5A-G00 45022-S5A-G01 45022-S5A-J00 45022-SR3-V00 45022-SR3-V01 45022-SR3-V10 45022-SR3-V11 45022-SR3-V12 45022-TR2-A00	SP1221	HP5039	D621-7497	21694 21695 21696	GDB1183 GDB3375	1286		
FPE084	FRONT (PAD)	HONDA	CIVIC(2007-)	ACCORD IV	45022-SNA-A52 D5080	45022-SM4-A00 45022-SM4-A01	SP1109 SP1231	HP5041 HP8150 HP8151	D465-7345 D764-7632 D465-7573 D764-7573	21497 21498 21499	GDB894 GDB3144	1391	2149701	
FPE087	FRONT (PAD)	TOYOTA	COROLLA 09MY(Fr)	(07.01~)	04465-02160 04465-02200 04465-02210	04465-02270 04465-02370	SP1500	HP5182	D1571-8780	24121 24122 24590 24591	GDB3481		2412201	○
			AURIS	4ZZFE-HTWC,1ZRFE-HTWC,DBA-ZRE154H-BHXEK(07.03~) DBA-ZRE152H(09.05~)										
FPE088	REAR (PAD)	TOYOTA	COROLLA 09MY(Fr)	(07.01~)	04466-02170 04466-02180	0446602181 0446602182	SP1501		D1501-8781	24664 24665 24666	GDB3480		2466401	○
			AURIS	4ZZFE-HTWC,1ZRFE-HTWC,DBA-ZRE154H-BHXEK(07.03~) DBA-ZRE152H(09.05~)										

FRIXA CODE	POSITION	MAKER	REPRESENTATIVE MODEL	INTERCHANGEABLE	PARTS NO.		SP NO.	HP NO.	FMSI NO.	WVA NO.	TRW	BENDEX (DB NO.)	TEXTAR	E-MARK (E90)
FPE089	REAR (PAD)	TOYOTA	AVENSIS	ZZT250,ZZT251(03.03~08.01) CDT250,AZT250,AZT255,AZT250W,25 5W(03.10~08.01) ADT225,AZT251(W)(05.06~08.01)	04466-05010 04466-05020 04466-28110 04466-58010	04466-YZZE2	SP2184		D2067-9299	23620 23621 23622	GDB3456		2362002	
			ESTIMA	AHR20W,GSR50W,55W,DBA-GSR55W(06.01~) DAA-AHR20W(06.06~)										
FPE090	FRONT (PAD)	TOYOTA	COROLLA	NZE120,NZE121,NZE121G,NZE124,NZE124G,ZZE122(G),124(G),ZZE122(00.08~06.01) ZZE120(01.11~02.07) ZZE121(01.11~) CE121G,CE121(00.08~04.01)	04465-52230 04465-52210 04465-52220	04465-52170	SP1555 (C TYPE)		D1249-8367	25316 25317 25318 25319			2531601	
FPE091	FRONT (PAD)	TOYOTA	ALPHARD	ANH20W,25W,GGH20W,25W(08.05~)	04465-28520		SP2183		D1524-8732	24601	GDB7733		2460101	
			ESTIMA	ACR50W,ACR55W,AHR20W,GSR50W,55W(06.01~) DAA-AHR20W(06.06~)										
FPE092	FRONT (PAD)	SUZUKI	SWIFT	ZC71S(07.05~) ZC11S,ZC21S,ZD11S,ZD21S(04.11~) ZC31S(05.09~)	55810-57K00 55810-63J00 55810-63J01 55810-63J01-000	55200-57K10 55810-57K01 55810-71L00 55810-71L02	SP2086		D1614-8827	23962 23963 25181	GDB3522		2396302	
FPE096 (FPE120)	FRONT (PAD)	SUZUKI	JIMNY	SJ30(84.07~87.12) JA71C,JA71V(86.01~90.03) JA11C,JA11V(90.03~95.10) JA12C,JA12V,JA12W,JA22W(95.11~98.10) JB23W(98.10~03.09) JA51V,JA5C,JA51W(84.11~90.05) JB31W/32W(93.05~97.12) JB33W/43W(98.01~00.04) SN413V(98.08~) JB43W(02.01~)	55200-70810 55200-70811 55200-70812 55200-70AA0 55200-81A10 55200-81A31	55110-70A00 55110-80010 55110-80000 55110-80020	SP1540	HP8448	7540-D660	21142	GDB3210 GDB383		2114202	
FPE097	REAR (PAD)	TOYOTA	ESTIMA	CXR10G,11G,20G,21G,TCR20G(W),21W(93.08~95.01) CXR11G,CXR21G(94.05~96.08) CXR20G,21G,CXR10G,11G(96.08~99.12)	04466-28010 04466-28011 04466-28020	04492-28020 04466-28090	SP2036	HP5124	D501-7381	21688	GDB1138		2168801	
FPE098	FRONT (PAD)	SUBARU	IMPREZA	GF8,GC8(96.09~00.07) G11GD, GC(01.03~02.10)	26296-AC040 29296-AC041 26296-AC050 26296-AC060 26296-AC070 26296-AC200	26296-AE020 26296-AE080 26296-AE081 26296-AE140 26296-AE210 26296-AE220	SP1225	HP5044	7589-D721	21915 23558 23559 23560	GDB3217	1342	2355802	
			LEGACY	BG5(96.06~98.11) BH5,BH9(98.06~03.04) B12BE5C,B12BH5C(00.08~03.08) BE9(01.05~03.05) BEE,BHE(02.01~03.04)										
			FORESTER	SF5(97.02~02.01) S10SF(97.07~02.05)										
FPE099	FRONT (PAD)	DAIHATSU	MIRA	L275S,L285S(06.12~) L250S,L260S(02.12~07.10)	04465-B1330 04465-B1050	04465-B1110 04465-B2051	SP1550			25262 25273 25274	GDB3430		2526201	
			MOVE	L185S(06.10~) L150S,L160S,L152S,L175S(02.10~06.10)										
			TANTO	L350S,L360S(03.11~07.12)										

FRIXA CODE	POSITION	MAKER	REPRESENTATIVE MODEL	INTERCHANGEABLE	PARTS NO.		SP NO.	HP NO.	FMSI NO.	WVA NO.	TRW	BENDEX (DB NO.)	TEXTAR	E-MARK (E90)
FPE100	FRONT (PAD)	RENAULT	LOGAN	CLIO, MEGANE	410602192R 410609342R 6001547619 7701-207-066 7701-208-265	7701-209-639 7701-210-130 7701-210-142 7711-130-036 7711-130-071	SP1243	HP5197 HP8413	D1146-8256 D1579-8256 D292-7194	21404 21463 21472 21473	GDB1332 GDB1465 GDB400 GDB807		2146304	○
FPE101	FRONT (PAD)	FORD	FOCUS II		1223682 1321517 1360305 1508074 1519528 1566093 1695810 1712024 1753844 30683554	30715023 3M512K021AB 3M5J2K021A1A AV612K021BB B3YH-33-23Z B3YH-33-23ZA BPYK-33-23Z BPYK-33-23ZA BPYK-33-23ZA9C CV61-2001-BC	SP1260	HP5143	7947-D1230 D1044-7947	23723 23724 24139	GDB1583	1682	2372301	○
		MAZDA	3	BK12,BK14(03.10~09.01)										
FPE102	REAR (PAD)	FORD	FOCUS II		1360306	BPYK-26-48ZB 1566096	SP2091	HP5142 HP8225	D1931-9155 D1095-7957	23482 24136 24137	GDB1621	DB1665	2413701	○
		MAZDA	3	BK12,BK14(03.10~09.01)										
FPE103	FRONT (PAD)	LADA	VAZ 2108	CEVARO(90.~93.) SAMARA (VAZ 2108/2109)(86.~96.) SAMARA FORMA / DIVA / SAGONA (VAZ 21099)(88.~97.)	2108-3501089		SP1165			20789 21170	GDB469		2117002	
FPE104	FRONT (PAD)	LADA	VAZ 2110	110 (VAZ 2110)(96.~00.) 111 (VAZ 2111)(96.~) NOVA - KALINA (VAZ 2105/2107)(94.~00.) NOVA - KALINA BREAK (VAZ 2104)(94.~00.) SAMARA (VAZ 2108/2109)(95.~) SAMARA FORMA / DIVA / SAGONA (VAZ 21099)(95.~99.)	2108-3501080 2110-3501080		SP1181			23670 23671	GDB1446		2367101	
FPE105	FRONT (PAD)	LADA	NIVA 2121	COSSACK(78.~96.) NIVA (VAZ 2121)1.6/1.7i(76.~00.) NIVA (VAZ 2121)1.9D/1.9D JR,LX(88.~93.) TAIGA(77.~00.)	2121-3501090		SP1168			20660	GDB265		2066001	
FPE108	FRONT/ REAR (PAD)	MERCEDES BENZ	SPRINTER	SPRINTER (904)(96.~03.)	0024204120 0024204220 0034201720	9024210110 2D0698151A	SP1277		D949-7848 D1136-8246	29076 29153	GDB1288		2915301	○
FPE109	FRONT (PAD)	AUDI	A4		4B0698151E 4B0698151M 4B0698151N 4B0698151AB	4D0698151J 8E0698151F 8E0698151K 4B0698151E	SP2001	HP5253 HP8010	D840-7711 D840-7715 D840-7764	20676 23106 23107	GDB1049		2301802	
		VOLKSWAGEN	GOLF											
FPE110	REAR (PAD)	AUDI	A4	A3, A6	1027640 1H0698451D 1J0698451 1J0698451B 1J0698451D 1J0698451E 1J0698451H 1J0698451J 1J0698451K 1J0698451L 1J0698451M 1J0698451P 1J0698451S	1K0698451C 1K0698451J 1K0698451M 4252.23 4252.41 4254.67 4254.C1 4B0698451B 4D0698451D 5C0698451 5C0698451A 5C0698451B 5Q0698451E 8E0698451	SP2029- SP1391	HP8343 HP5247 HP8418	D340-7234 D894-7773 D1017-7920 D1023-7773 D1112-8216	20261 20960 23554	GDB1330	1192	2355402 2355401 2355406	○
		PEUGEOT	405											
		RENAULT	MEGANE											
		VOLKSWAGEN	GOLF											
FPE111	FRONT (PAD)		CHERY A3, A5				SP2134	HP5137						
FPE113	REAR (PAD)	TOYOTA	LAND CRUISER PRADO	HI-LUX(EURO)	4605A458 04466-60010 04466-60020 04466-60050 04466-60060 04466-60090	04466-60080 04466-60140 04492-60010 04492-60020 04466-YZZC8	SP2040	HP5037	D606-7487	21947		1200	2194701	

FRIXA CODE	POSITION	MAKER	REPRESENTATIVE MODEL	INTERCHANGEABLE	PARTS NO.		SP NO.	HP NO.	FMSI NO.	WVA NO.	TRW	BENDEX (DB NO.)	TEXTAR	E-MARK (E90)
FPE114	FRONT (PAD)	TOYOTA	HILUX 4*4	HI-LUX(EURO) LAND CRUISER/LAND CRUISER PRADO	04465-35030 04465-35031 04465-35040 04465-35080 04465-35190 04465-35230 04465-35240 04465-35280 04465-60030 04465-60130	04465-60260 04465-YZZAF 04491-35160 04491-35170 04491-35171 04491-35190 04491-35260 04491-60080 J0446535040 J0449135160	SP1222	HP5036 HP8457 HP8494	D436-7298 D436-7549 D410-7198	21679 21681 21680 21785	GDB797	1323	2167901	
FPE115	FRONT (PAD)	TOYOTA	HIACE 90-98	DYNA/TOYOACE,HI-LUX SURF(PICKUP),HI-LUX(EURO) QUICK DELIVERY	04465-26210 04465-26230 04465-26330	04491-26040 04491-26070	SP1121	HP5011	D438-7205 D303-7205	21158	GDB7045 GDB1181 GDB351	318 438		
		VOLKSWAGEN	TARO											
FPE116	FRONT (PAD)	DAIHATSU	MEERA 05MY	CHARADE, CUORE VII, CUORE VIII, TREVIS	04491-97214 04491-97214-000	4605B006 04465-B2040	SP1611		D1731-8956	24229 24230	GDB7114		2422901	
FPE117	FRONT (PAD)	TOYOTA	HDZ100 LAND CRIUSER FRONT		04465-60120 04465-60140 04465-60150 04465-60151 04465-60160 04465-60170	04465-60190 04465-60220 04465-60230 04465-60240 04465-60250 04465-YZZCM 04465 YZZF6	SP1379	HP5084	D772-7639	23524 23525	GDB3197	1365	2352402	
FPE118	REAR (PAD)	TOYOTA	HDZ100 LAND CRIUSER REAR		04466-60030	04466-60070 04466-YZZC4	SP1380	HP5199	D773-7640	23539		1383	2353902	
FPE119	FRONT (PAD)	DAIHATSU	CUORE NEW	DOMINO, LEEZA, MIRA, MOVE, OPTI, PERODUA NIPPA	04491-87228 04491-87206 04491-87209 04491-87229	04491-87209 04491-87218 04491-87217		HP9761		21968 21969	GDB3126		2196801	
		PERODUA	KANCIL	NIPPA										
FPE122	FRONT (PAD)	SUZUKI	SWIFT	CULTUS	55200-82830 55210-82020	55220-82020		HP8443	D296 7197-D296	21252 21253	GDB382	402	2125202	
		ISUZU	GEMINET											
FPE123	FRONT (PAD)	MAZDA	MAZDA2	DEMIO, DEMIO3	DFY13328Z DFY13328ZA	DFY13329ZA	SP2113		D1454-8653 D1454-8738	24283 24284 24285	GDB3437		2428303	○
		FORD	FIESTA	FIESTA IV, FIESTA VI										
		SUZUKI	SWIFT(EURO)											
		DAIHATSU	BOON	LUMINAS,MATERIA,SIRION,STORIA										
FPE124	FRONT (PAD)	MITSUBISHI	LANCER	LEGNUM,OUTLANDER,SPACE RUNNER,ASX,RVR AIRTREK,CHARIOT,DELICA,DION,ECLIPSE	4605A486 4605A491 4605A557 MR569403 MZ690348 MR527675 MN102618 1607690380 1607690480	MZ690568 MR527674 MR727674 05191229AA 05191244AA 4605A261 5191229AA CW650649 CW650653	SP1360	HP5158	D866-8338 D866-7741	23584	GDB3287	1441		○
		CHRYSLER	COUPE 6											
		DODGE	AVENGER II	CALIBER										
		JEEP	COMPASS	PATRIOT										
		CITROEN	C4 AIRCROSS											

FRIXA CODE	POSITION	MAKER	REPRESENTATIVE MODEL	INTERCHANGEABLE	PARTS NO.		SP NO.	HP NO.	FMSI NO.	WVA NO.	TRW	BENDEX (DB NO.)	TEXTAR	E-MARK (E90)
FPE125	FRONT (PAD)	SUBARU	IMPREZA	IMPREZA, LEGACY	26296AE200	26296-AE190	SP1629		D1999-9229	24372	GDB7682		2437201	○
FPE126	FRONT (PAD)	SUZUKI	LIANA		5581054G61 5581054G60	5581054G50	SP1541	HP8153 HP8442	D1195-8315	23817 24034 24035	GDB3290		2381701	○
FPE127	FRONT (PAD)	SUZUKI	SWIFT	SPLASH	5581062J20 5581062J31 4711040 D1060-BH40A	4308239 D1060 1HA0B	SP1564		D1435-8553 D1491-8691 D1858-9086	23973 24403	GDB3396		2397302	○
FPE128	FRONT (PAD)	TOYOTA	PICK UP	HI-LUX PICK UP(07.~) HI-LUX VIGO INNOVA/KIJANG	04465-0K160 04465-0K010		SP1276	HP5266	D1710-8934	24567	GDB3500	DB1741	2456701	○
FPE129	FRONT (PAD)	NISSAN	TIIDA	AD EXPERT,BLUEBIRD/SYLPHY,CUBE,LATIO,MARCH MICRA,NOTE,VERSA,WINGROAD	41060-AX085	41060-RN22A	SP1383	HP5267	D1345-8456	24682 24683 24684	GDB7743	DB1819	2468201	
FPE130	FRONT (PAD)	TOYOTA	YARIS	YARIS(07.~), BELTA, COROLLA, AXIO, PREMIO, ALLION, PRIUS IV ,VIOS,VITZ, ALTIS	04465-52200 04465-52260		SP1377		D1184-8538	24347 24451	GDB7706		2445103	○
FPE131	FRONT (PAD)	TOYOTA	PICK UP	HI-LUX VIGO, INNOVA/KIJANG	04465-0K290		SP1544	HP5276	D1523-8731	23416 23417 23654 23655		DB1675	2524601	
FPE132	FRONT (PAD)	TOYOTA	PICK UP	HI-LUX 4X4(05.~) HI-LUX PICKUP(02.~06.) HI-LUX VIGO FORTUNER TACOMA TACOMA STOUT	04465-0K020 04465-0K140	04465-YZZ5V	SP1375	HP5200	D799-7671	21680 21679	GDB3428		2168001	○
FPE133	FRONT (PAD)	TOYOTA	ESTIMA	ESTIMA / HYBRID(99.12~03.04) PREVIA	04465-28430		SP1591	HP8488	D1227-8346	24522	GDB3248		2452201	
FPE134	REAR (PAD)	SUBARU	IMPREZA R	IMPREZA, LEGACY,OUTBACK,BAJA,FORESTER	26296-FC002 26696-AG020 26696-FC000	26696-FC001 26696-FC020	SP2120	HP5132	D770-7637	23572 23573 23574	GDB3223		2357202	
FPE135	FRONT (PAD)	ISUZU	ELF	COMMERICAL NPR SERIES	8-97329266-0 8-97377522 8-97168633 8-97365911	97168633 97329266 97780424 41060-89TB6 41060-89TC8 58675-00810 8-98216-922-0 04465-37090 04465-37091	SP1667	HP8188	D825-7697 D1732-7697	25800	GDB7234			
FPE136	REAR (PAD)	MITSUBISHI	LANCER EVO		26696FG000 26696FG001 26696FG080 44060CD094 4605A050	D40F0CD01B D40F0CD026 D40F0CD094 MR407391	SP1495	HP5205	D961-7859	21580	GDB3350	DB1521	2158001	
FPE137	FRONT (PAD)	TOYOTA	HILUX VII 2009~	TACOMA	04465-0K240 04465-0K340	04465-0K320	SP1484		D1567-8776	25209 25210	GDB3534		2520901	
FPE138	FRONT (PAD)	CHEVROLET	SAIL		9041415		SP2199	HP5274	D1661-8888					
FPE139	REAR (PAD)	SUBARU	LEGACY		26696AG031 26696-FJ000	26696-AG010 26696-AG030	SP2118	HP8433	D1114-8218	24271 24272	GDB3373	DB1803	2427101	

FRIXA CODE	POSITION	MAKER	REPRESENTATIVE MODEL	INTERCHANGEABLE	PARTS NO.		SP NO.	HP NO.	FMSI NO.	WVA NO.	TRW	BENDEX (DB NO.)	TEXTAR	E-MARK (E90)
FPE142	FRONT (PAD)	TOYOTA	CAMRY V	AVALON,VISTA,AURION, DAIHATSU(ALTIS),TOYOTA(AURION)	04465-06080 04465-07010 04465-YZZEG	04465-33440 04465-33450 04465-33470 04465-33471 04465-07010	SP2080		8331-D1222 8331-D1293	24350	GDB3429 GDB7713		2435001	
FPE143	REAR (PAD)	TOYOTA	CAMRY	MARK X ZIO,RAV4,AURION VANGUARD,LEXUS(ES350)	04466-33180 04466-42060 04466-02220 04466-06060 04466-75010 04466-06070 04466-06090	04466-33160 04465-33180 04466-33200 04466 06100 04466 06210 04466 YZZE8 V9118B038 04466-06200	SP2081	HP5178	D1212-8332	24338			2433801	
FPE144	FRONT (PAD)	MERCEDES BENZ	C200		0034202520 0034204520	0034205920 0034206020	SP2191	HP5191	D872-7747	23144 23145	GDB1413		2314401	
FPE145	REAR (PAD)	MERCEDES BENZ	C200		0034200620 0034201920	44209420	SP2192	HP5193	D848-7724	23078	GDB1455		2307801	
FPE149	FRONT (PAD)	MITSUBISHI	PAJERO L300	MONTERO, STRADA	MB500812 MB500813 MB500814 MB500815 MB500816 MB500819	MR162523 MR162524 MR389523 NR389526 MZ690334	SP1135	HP5022	D349-7241	21373 21374 21375	GDB729	DB1113		
FPE151	FRONT (PAD)	CITROEN	XANTIA		4251.13 4251.57	4252.92 95667787	SP1253	HP5100	D1485-8684	21632 23148 23149	GDB1102	DB615	2163201	
FPE152	REAR (PAD)	CITROEN	XANTIA		95667788		SP1254	HP5101	D1217-8337	20162	GDB1247	DB875	2016203	
FPE156	FRONT (PAD)	TOYOTA	AURIS, COROLLA		04465-02390	04465-02391	SP1700		D1964-9189	25698 25699 25700 25090 25091 25092	GDB3598		2569801	
FPE157	FRONT (PAD)	MAZDA	MAZDA 3	MAZDA 3 SALOON, CX-3	BHY1-33-28ZA	B4Y0-33-28ZB	SP1729		D1728-8952	25875 25876 25877	GDB3592		2587501	
FPE158	FRONT (PAD)	MAZDA	MAZDA 6 SALOON	MAZDA6 SALOON, 6 ESTATE	G4YA-33-28ZA GHY9-33-28ZB GHY9-33-28ZC	G4YA-33-28Z GHY1-33-28Z	SP1728		D1711-8936	25725 25726	GDB3580		2572501	
FPE159	REAR (PAD)	MAZDA	MAZDA 3 (BM) SKYAKTIV	MAZDA 3 SALOON (BM) SKYAKTIV	B4Y0-26-48ZA B4Y0-26-48ZB		SP1730		D1729-8953	25878 25879 25880	GDB3593		2587801	
FPE160	FRONT (PAD)	KHODRO	NEW SAMAND				SP1418	HP5271						
FPE161	FRONT (PAD)	SUZUKI	VITARA		55200-65J00	55200-65J11	SP1416	HP8447	D1188-8307	24346	GDB3443		2434601	
FPE162	FRONT (PAD)	MAZDA	MAZDA 323, FORD		BJYD-33-23Z BJYM-33-23Z	BJYD-33-28Z BJYM-33-28Z	SP1227	HP5016	D798-7670	23490	GDB3193	DB1358	2349001	

FRIXA CODE	POSITION	MAKER	REPRESENTATIVE MODEL	INTERCHANGEABLE	PARTS NO.		SP NO.	HP NO.	FMSI NO.	WVA NO.	TRW	BENDEX (DB NO.)	TEXTAR	E-MARK (E90)
FPE163	FRONT (PAD)	MAZDA	MAZDA B-SERIES		04491-87602 04491-87603 04491-87613 UA01-49-280A UA01-49-280	04491-60020-000 04491-87603-000 04491-87601-000 04491-87602-000 04491-87613-000	SP1417	HP8250	D239-7151	21243	GDB980	DB271 DB291		
FPE164	FRONT (PAD)	KHODRO	PAYKAN	HILLMAN			SP1358							
FPE165	FRONT (PAD)	RENAULT	CLIO	RENAULTCLIO III, MEGANE II,SCENIC II	41060-1237R 7701209100	7701209670 7711130086	SP1414		D1542-8750	23215 24535	GDB1687		2453501	
FPE166	FRONT (PAD)	TOYOTA	LAND CRUISER 2004		04465-35290 04465-35250 4605A472 4605A481	04465-0K090 04465-60270 04465-YZZDB	SP2033	HP5098	D976-7875	24024 24025 24026	GDB3364	DB1482	2402401	
FPE167	FRONT (PAD)	TOYOTA	VITZ 99	YARIS	04465-52052 04465-52070 04465-59020	04465-52130 04465-52140 04465-YZZCJ	SP1230	HP5018	D831-7704	23348 23349 23350	GDB3218	DB1378	2334803	
FPE168	FRONT (PAD)	HONDA	CITY 96-2002	CIVIC IV, CIVIC V, JAZZ III, LOGO, PRELUDE II	45022-SH3-306	45022-SH3-256	SP1462	HP8166	D256-7162	20193 20194 20959 21678	GDB325	DB300	2095902	
FPE169	FRONT (PAD)	HONDA	ACCORD 86	INTEGRA, CRX I	45022-SD2-506 45022-SD2-505 45022-SD2-A01 45022-SD2-A02 45022-SD2-A10 45022-SD2-A11	45022-SD2-A12 45022-SD2-A13 45022-SE0-316 45022-SE0-910 45022-SE0-911 45022-SE0-A01	SP1346	HP5059	D334-7229	20099 20104 20108	GDB784	DB429	2009901	
FPE170	FRONT (PAD)	HONDA	CITY 2009	CIVIC V, CIVIC VI, CIVIC VII, CRX III	45022-TG0-T00				D621-7998		GDB7855			
FPE173	FRONT (PAD)	KHODRO	RUNNA											
FPE174	FRONT (PAD)	SAIPA	TIBA				SP1722							
FPE175	FRONT (PAD)	TOYOTA	CAMRY		04465-06090		SP1590		D1726-8950	25610 25611 25612	GDB3614		2561001	
FPE176	REAR (PAD)	TOYOTA	CAMRY		04466-06080		SP1236	HP5244	D1727-8951	25599 25600 25601		DB1475	2559901	
FPE178 (S1BMW01)	FRONT (PAD)	BMW	528	1 COUPE, 3 COUPE, 5 SERIES	34116753668 34116767580		SP2210	HP5196	D918-7799 D1260-7799	23311 23312 23347 23704 23733	GDB1498	DB1498	2331207	
FPE179 (S1BEN01)	FRONT (PAD)	MERCEDES BENZ	BENZ E300	E CLASS	0001429920 0004200720	0004209920 0014200720	GP3906	HP5027	D423-7311	20940 20941 21028 21029	GDB818	DB425	2094102	
FPE180 (S1SLEX01)	FRONT (PAD)	LEXUS	LEXUS ES300	TOYOTA CAMRY	04465-06080 04465-07010 04465-YZZEG	04465-33440 04465-33450 04465-33470 04465-33471	SP2080		D1222-8331 D1293-8331	24350	GDB3429		2435001	

FRIXA CODE	POSITION	MAKER	REPRESENTATIVE MODEL	INTERCHANGEABLE	PARTS NO.		SP NO.	HP NO.	FMSI NO.	WVA NO.	TRW	BENDEX (DB NO.)	TEXTAR	E-MARK (E90)
FPE181 (S1HON01)	FRONT (PAD)	HONDA	CR-V		45022-SHJ-A00		SP2115	HP5169	D1089-7994	24342	GDB7727		2434201	
FPE182 (S1TOY01)	FRONT (PAD)	TOYOTA	CAMRY		04465-30340 04465-33240 04465-33250 04465-33260 04465-33320 04465-33340	04465-44140 04465-68010 04465-06030 04465-YZZDZ 04465-33246	SP2037	HP5053	D908-7787 D1052-7787	23928 23806	GDB3314	DB1462	2392801	
FPE183 (S1BEN02)	FRONT (PAD)	MERCEDES BENZ	C200	S-CLASS, ML-CLASS	0034200520 0034200820 0034201820 0034208920	0044200420 1634200620 1634200820 1634201020	SP2193	HP5148	D847-7723	23045 23271	GDB1454	DB1453	2327102	
FPE184 (S1VWN01)	FRONT (PAD)	VOLKSWAGEN	VW GOLF 2.0TDI		1J0698151K 1J0698151M 8N0698151A		SP2097	HP8536 HP8539	D555-7434 D687-7710	21848 21911 23392	GDB1440		2184903	
FPE185 (S1HON02)	FRONT (PAD)	HONDA	HONDA ACCORD 3.5		45022-S10-A00 45022-S10-E50 45022-S10-G01 45022-S10-G02 45022-S1A-E20 45022-S1A-E70 45022-S1A-E71	45022-S30-A00 45022-S30-A02 45022-S30-E50 45022-ST7-R00 45022-ST7-R02	SP1076-F	HP5009	D503-7382	21651 21652 21653	GDB3177 GDB3188 GDB3196 GDB995	DB1206	2165101	
FPE186 (S1BMW04)	FRONT (PAD)	BMW	BMW320D		34111164498 34111164500 34111165555 34111165557 34112157570	34112157571 34116752482 34116756128 34116761242 34116761244	SP1388	HP5031	D781-7649 D781-7847	21925 21926 23286 23287 23288	GDB1348	1414	2328702	
FPE187 (S1BMW02)	FRONT (PAD)	BMW	BMW520D		34116763617 34116763618	34112339267	SP2159		D1061-7967	23793 23794 24096 24193	GDB1559		2379301	
FPE189 (S1AUD01)	FRONT (PAD)	AUDI	AUDI A4 2.0 TFSI		1551486 1567730 1577447 1675380	1705930 9M512K021AA 9M512K021BA 9M512K021BB	SP2145			24408 24409	GDB1833		2440901	
FPE190 (S1LEX02)	FRONT (PAD)	LEXUS	ES330		04465-08030	04465-33350	SP1372	HP5054 HP8523	D906-7785 D906-7896	23855	GDB3612	DB1490	2385501	
FPE191	FRONT (PAD)	HYUNDAI	GRAND I10 F		58101-B4A00		SP1719			25976	GDB3618		2597601	○
FPE192	FRONT (PAD)	MITSUBISHI	PICK UP L200 01~06		MN102617	MR527550	SP1256	HP5251		23086 23087 23316 23317	GDB3124	DB1308	2308602	
FPE193	FRONT (PAD)	MITSUBISHI	PICK UP L200 07~14		4605A198 4605A284	MZ690356 MZ690572	SP1361		D1519-8728	24529 24530	GDB3435		2452901	
FPE194	FRONT (PAD)	LAND ROVER	RANGE ROVER		SFP500045 SFP500070		SP2235		D1263-8380	20217	GDB1743		2021701	
FPE195	FRONT (PAD)	MAZDA	MAZDA 2		DAY6-33-28ZA	DBY1-33-28Z 04465-WB001	SP1974		D1852-9081	22235 22236	GDB2122		2223501	○

FRIXA CODE	POSITION	MAKER	REPRESENTATIVE MODEL	INTERCHANGEABLE	PARTS NO.		SP NO.	HP NO.	FMSI NO.	WVA NO.	TRW	BENDEX (DB NO.)	TEXTAR	E-MARK (E90)
FPE196 (FPLEX02)	FRONT (PAD)	LEXUS	LEXUS ES330		04465 36050 04465 36020	04491 36010	SP1372		D1550-8759	23306 29296 26297	GDB3027		2929601	
FPE197	FRONT (PAD)	LEXUS	LX570		04465-60280	04465-0C020 04465-60300	SP1381	HP5213	D1303-8419	24386 24394 24395	GDB3524		2438601	
FPE212	FRONT (PAD)	PEUGEOT	BOCER 3		4254.61 4254.56 4253.55	77364014 77366017 1612433880	SP1904		D1489-8689	24468 24469	GDB1681		2446901	
FPE213	FRONT (PAD)	FORD	GALAXY 3		1379971 1436498 1437761 1458247 1566232	30793540 30793941 6G91-2K021-A2D ME6G9J2K021AA	SP2101-F		D1306-8421	24123 24124	GDB1683		2412301	
FPE214	FRONT (PAD)	BMW	3 SERIES (E36)		34111160356 34111160357 34111160532 34111161437	34111161438 34111161445 34111161446 34111163850		HP5270	D558-7437	21292 21293 21643 21644 21916	GDB1100		2328781	
FPE215	FRONT (PAD)	NISSAN	ALMERA 2		41060-4M525 41060-4M526	41060-BM425 D1060-BM40A	SP1581			21546 23069	GDB3271		2154601	
FPE216	REAR (PAD)	FORD	TRANSIT 5		1371454 1433958 1530602 1554524 1560026 1819638	1824348 6C11-2M008-AC 6C11-2M008-AE 6C11-2M008-AB ME6C1J2M008AA ME6C1J2M008AB			D1502-8701 D1502-8737 D1639-8866	22017 24486 25918	GDB1725		2448601	
FPE217	REAR (PAD)	MERCEDES BENZ	SPRINTER 2-t(901,902)		2D0698451A		SP4094		D951-7850	21621 21622	GDB1262		2162101	
FPE218	FRONT (PAD)	SUZUKI	SX4		71742853 55810-79J00	71750033 55810079J10	SP1751			24391 24392	GDB1673		2439101	
FPE219	REAR (PAD)	AUDI	A3 2 SPORTBACK		4B3698451 4B3698451A 4F0698451 4F0698451F 4F0698451H 7H0698451A 8E0698451C	8E0698451H 8E0698451N 4F0698451G 4E4698451A 4E4698451 4E0698451B 4E0698451A	SP2112-R	HP8542	D1018-7921	23326 23854 23882	GDB1516	DB1693	2332601	
FPE220	FRONT (PAD)	MERCEDES BENZ	C-CLASS (A205)		0054200920 0074205620	0054201220 0074205520 A0074205720	SP2284		D1340-8421	24207 24306	GDB2056		2430602	
FPE221	FRONT (PAD)	AUDI	A4 (8D2, B5)		4E0698151F 4E0698151M 4F0698151A	8E0698151G 8E0698151L 8E0698151C	SP2112-F	HP5254 HP8542	D915-7796 D979-7882 D1111-7796	23762 23763 23801 23591	GDB1617		2376302	
FPE222	REAR (PAD)	BMW	5 SERIES (E61)		34216763043 34216763044	34212339290	SP2157			23732 23737	GDB1727		2373201	
FPE223	REAR (PAD)	BMW	5 SERIES (F07)		34216768471 34212284296 34212339291 34212339292	34216757536 34216761286 34216763012 34216763305	SP2164		D919-7820	23731 24458 24495			2373001	

FRIXA CODE	POSITION	MAKER	REPRESENTATIVE MODEL	INTERCHANGEABLE	PARTS NO.		SP NO.	HP NO.	FMSI NO.	WVA NO.	TRW	BENDEX (DB NO.)	TEXTAR	E-MARK (E90)
FPE224	REAR (PAD)	AUDI	A6 IV (4G5, C7, 4GD)		4G0698451A		SP2317		D1547-8785	24606 25214	GDB1902		2521413	
FPE225	REAR (PAD)	AUDI	A4 (8K5, B8)		8K0698451 8K0698451A		SP2146		D1386-8494	24606	GDB2107		2460602	
FPE227	FRONT (PAD)	BMW	5 SERIES (F11)		34116856591 34116858047	34116775310 34116796844	SP1699		D1504-8705	23794 24697	GDB1882		2379401	
FPE229	REAR (PAD)	AUDI	A6 (4G5, C7, 4GD)		3C0698451F 5N0698451	3AA698451 3C0698451E	SP2263		D1348-8213	22192 22268 24483	GDB1763		2448301	
FPE233	REAR (PAD)	BMW	5 SERIES (F11)		34216798193 34216862202	34216788284 34216796741	SP2275		D1473-8672	24561 24562	GDB1840		2456101	
FPE234	REAR (PAD)	MINI	MINI (R52)		34216778327 34216794059		SP2246		D1309-8424	24289 24290	GDB1766		2428901	
FPE235	FRONT (PAD)	BMW	1 SERIES (E88)		34116772892		SP2245		D1308-8423	23915 23916	GDB1870		2391601	
FPE236	REAR (PAD)	BMW	B7 (F01,F02)		34216775342 34216790966		SP2213		D919-7820	23731 24695	GDB1857		2373101	
FPE237	FRONT (PAD)	TOYOTA	AVENSIS 3(ZRT27, ADT27)		04465-02190		SP1580			24668 24669 24929	GDB3479		2420401	
FPE238	FRONT (PAD)	BMW	X4(F26)		34114074370 34116778403	34116779293 34116852253	SP2172		D1294-8411	24170 24171	GDB1726		24174001	
FPE239	REAR (PAD)	BMW	X5 2 (E70) R		34216776937		SP2215		D1042-7427	23447 23732	GDB1730		2344704	
FPE240	FRONT (PAD)	JEEP	CHROKEE (2005~2010)		5080868AA 5080868AB 5080868AC		SP1676	HP5258	D1080-7985 D1181-8297	24250 24251 24252	GDB4136		2425001	
FPE241	FRONT (PAD)	CHEVOLET	TAHOE 2007		1925 7667 2274 2382 2274 2382	2313 5915 2274 2382	SP1561		D1363-8803					
FPE242	REAR (PAD)	CHERY	MVM X33 R		T11BJ3501080		SP1457		D1051-7955	23656 23657 23658	GDB3279		2365601	
FPE244	REAR (PAD)	CHERY	MVM 530 R		T113502080BA		SP2126-R		D1673-8902		GDB7816			
FPE246	FRONT (PAD)	TOYOTA	RAV4		04465-02230 04465-42140 04465-42150	04465-42180 04465-42190 04465-YZZDY	SP2138	HP5177	D1211-8331	24337	GDB3424		2433701	
FPE247	FRONT (PAD)	SEAT	BERELIANCE		1J0 698 151 B		SP1701	HP5168	D768-7860	21974	GDB1357		2313001	
FPE248	FRONT (PAD)	FAW	BESTERN		G1YC-33-28ZC G2YD-33-23Z GJYA-33-23ZA GJYA-33-23ZB GJYA-33-23ZC GJYA-33-23ZD GJYA-33-28ZA GJYB-33-23ZB	GJYB-33-23ZC GJYB-33-23ZD GJYB-33-28ZC GJYB-33-28ZD GJYC-33-23Z GJYC-33-28Z GJYC-33-28Z9C	SP2027	HP5144	D1642-8869	24246 24247 24248 24249	GDB3309		2424601	

Distributed by Hankook driving emotion

FRIXA CODE	POSITION	MAKER	REPRESENTATIVE MODEL	INTERCHANGEABLE	PARTS NO.		SP NO.	HP NO.	FMSI NO.	WVA NO.	TRW	BENDEX (DB NO.)	TEXTAR	E-MARK (E90)
FPE252	FRONT (PAD)	SUZUKI	APV		04465-BZ010 04465-BZ170		SP1589	HP1598	D1471-8671		GDB7656			
FPE255	FRONT (PAD)	MITSUBISHI	MINICA		MR493173		SP1613	HP9284			GDB7177			
FPE256	FRONT (PAD)	SUZUKI	LIANA		55810 54G11		SP1633	HP8441	D937-7839	24830 24831	GDB7698		2483001	
FPE260	FRONT (PAD)	SUZUKI	SUPER CARRY		55200-50FA0 55200-60860 55200-60880 55200-61860	55200-62870 55200-62871 55200-62872 55200-62873 55200-62874		HP9730		23303 23304	GDB3234		2330301	
FPE261	FRONT (PAD)	NISSAN	SD22		D1060-F6494 41060-01W26 41060-09W93 41060-11P85 41060-13E90 41060-13E91 41060-13E92 41060-16C90 41060-31E85 41060-31E86 41060-31E87 41060-31E88 41060-31E90 DA060-31E86	41060-31E92 41060-32E91 41060-37G93 41060-56L25 41060-9C025 41060-9C026 41060-D4690 41060-D6090 41060-V6791 41060-Y9601 D1060-11P92 D1060-11P93 D1060-V6794	SP1095	HP8334	D265-7170	21099 21229				
FPE262	FRONT (PAD)	SUZUKI	WAGON R		55810-75F00 55810-75F10	55810-75F12 55810-75F30	SP2021			23662	GDB3221		2366201	
FPE264	FRONT (PAD)	FORD	FUSION		DG9C-2001-AB DG9C-2K021-EC				D1665-8893	22269 22270 25591 25592 25593			2226901	
FPE265	REAR (PAD)	FORD	FUSION R		DF9Z-2200-Z		SP4171		D1653-8882	22231 22531 25798 25799			2223101	
FPE266	FRONT (PAD)	VOLKSWAGEN	TIGUAN		1K0698151 1K0698151C 1K0698151E 3C0698151	3C0698151B 5K0698151 JZW698151B	SP2098		D1107-8212	23589 24078 24153	GDB1550		2358901	
FPE267	FRONT (PAD)	EM	GRAND7		4252.22 4252.35 4252.53 4253.39	4253.85 4251.18 4254.71 4254.89 4254.92	SP2073		D1541-8749	23600	GDB1464 GDB1591 GDB1676		2360001	
FPE268	REAR (PAD)	EM	GRAND7 R		4253.22 4253.25	4253.98 4253.99 4254.76	SP2100		1621-8833	24150	GDB1620		2415001	
FPE366	FRONT (PAD)	MERCEDES BENZ	E-CLASS(W211)		0044208720 0044208720	0034206520 0034209920	SP2194		D987-7889 D987-8517	23428 23743 23744	GDB1542		2374303	

FRIXA BRAKE SYSTEM ***FOREIGN VEHICLES(LINING)***

FRIXA CODE	POSITION	MAKER	REPRESENTATIVE MODEL	INTERCHANGEABLE	PARTS NO.		SP NO.	WVA NO.	FMSI NO.	TRW	E-MARK (E90)
FLE01	REAR (SHOE ASS'Y)	RENAULT	CLIO2 BOX R(98.09~)	CLIO Mk2 LOGAN 1 LOGAN 2 THALIA 1	440609415R 7701206429 7701207178		SA177			GS8455	
FLE02	REAR (SHOE ASS'Y)	SUZUKI	ALTO 1000CC	CHEVROLET CRUZE,IGNIS,KEI MR WAGON,SWIFT TWIN, WAGON R	53200-76G20 53200-76G51 53200-76G31	53200-76G00 53200-76G50				GS8476	
FLE03	REAR (SHOE ASS'Y)	SUZUKI	ST308/JEEP	ALTO, CARRY, EVERY	52210-79260 52200-70820 52210-79241 52200-80820 52200-80840	52210-85400 52210-77301 52210-79240 52210-80040 52210-77300				GS8195	
FLE04	REAR (SHOE ASS'Y)	SUZUKI	MARGALLA/LIAYNA 1.6	AERIO ALTO BALENO CERVO CULTUS CULTUS CRESCENT ESTEEM SWIFT	53210-70C10 5320069G00 5320069G11 5320069G12 53200-60841	53210-70C00 04495-87707 04495-87707000 04495-87708 04495-87708000				GS8549	
FLE05	REAR (SHOE ASS'Y)	TOYOTA	EE80	CAMRY,CARINA,CELICA,COROLLA,CURREN, SPACIO SPRINTER	04495-12090 04495-12080 04495-12081					GS8224	
FLE06	REAR (SHOE ASS'Y)	SUZUKI	ALTO	CERVO,FRONTE	53210-84010 53210-46A50 53210-56A10 53210-56A50 53800-50800 53800-56810	53830-60F90 725157360 725178170 725178360 725178480 725178481			1363-591	GS8302	
FLE07	REAR (SHOE ASS'Y)	SUZUKI	SWIFT		53200-82810	53210-82031			1384-550	GS8248	
FLE08	REAR (SHOE ASS'Y)	SUZUKI	ST 30		52210-79030						
FLE09	REAR (SHOE ASS'Y)	TOYOTA	HIACE 2002 PIN DIFFERNCE AS K 2330	LITEACE,TOWNACE	04495-26140 04495-26130 04497-26080	04495-87608 04495-26150				GS8593	
FLE10	REAR (SHOE ASS'Y)	TOYOTA	HILUX 84	HIACE, DYNA/TOYOACE	04497-26020	04495-35031 04495-26021				GS8171	
FLE11	REAR (SHOE ASS'Y)	TOYOTA	HILUX 4*2 FRONT		04494-26030	04494-26020				GS8143	
FLE12	REAR (SHOE ASS'Y)	TOYOTA	LAND CRUISER	DYNA/TOYOACE	04495-60020 04495-60030 04495-60031 04495-60050 04495-60060	44060-G9825 04495-60011 04495-60070 04495-60010 04495-60051				GS8502	

FRIXA CODE	POSITION	MAKER	REPRESENTATIVE MODEL	INTERCHANGEABLE	PARTS NO.		SP NO.	WVA NO.	FMSI NO.	TRW	E-MARK (E90)
FLE13	REAR (SHOE ASS'Y)	TOYOTA	4*4 HILUX 89-2006	DYNA/TOYOACE, LAND CRUISER,TACOMA TUNDRA, HIACE	04495-35151 04495-35230 04495-26051 04497-26070 04495-26100 04495-35061	04497-26071 04495-35150 04495-35151 04495-26061 04495-26060 04495-26050				GS8501	
FLE14	REAR (SHOE ASS'Y)	TOYOTA	HIACE LH114		04495-26180 04495-26190 04495-26210	04495-26220 04495-26230 04495-35200				GS8693	
FLE15	REAR (SHOE ASS'Y)	KHODRO	NEW SAMAND								
FLE16	FRONT (SHOE ASS'Y)	NISSAN	SAIPA	ZAMYAD	41060-T3226	41060 T3260 D1060 T3285				GS7022	
FLE17	REAR (SHOE ASS'Y)	NISSAN	SAIPA	ATALAS CONDOR	41060-T9627 AY340NS009 AY340NS011 AY340NS001 AY340NS002	41060J5125 41060J5110 4106001D27 4106001D25				GS7017	
FLE18 (FLK23)	REAR (SHOE ASS'Y)	HYUNDAI	GRAND I10	ALL NEW PRIDE CLICK 8"	58305 1CA10 58305 B4A70	58305 3XA00	SA133			GS8785	
FLE023	REAR (SHOE ASS'Y)	PEUGEOT	405		4241K1	4241K2 4241K3	SA158			GS8272	O
FLE024	REAR (SHOE ASS'Y)	PEUGEOT	206 1.4		4241K5	4241N1	SA157			GS8642	O

Distributed by HANKOOK driving emotion

TM FRIXA BRAKE SYSTEM

FRIXA BRAKE SYSTEM ***PRODUCT DRAWING***

KOREAN VEHICLES	P 78 ~
FOREIGN VEHICLES (PAD)	P 137 ~
FOREIGN VEHICLES (LINING)	P 182 ~

FLD01 — CHEVROLET

PART NUMBER	53200-70800-000
REPRESENTATIVE MODEL	TICO
INTERCHANGEABLE	TICO(91.~00.09) MATIZ(SPARK)(98.~09.08)

PO	SP	HP	FMSI	WVA	TRW
REAR (SHOE ASS'Y)	SA086 (SA050)	HS2001			GS8645

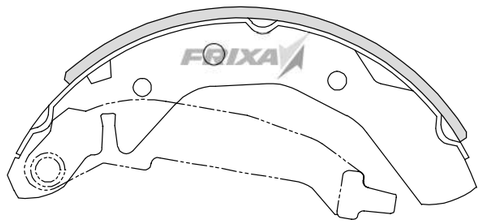

FLD02 — CHEVROLET

PART NUMBER	S4520001
REPRESENTATIVE MODEL	PRINCE
INTERCHANGEABLE	PRINCE(92.~97.) ROYAL PRINCE(~92.) BROUGHAM(93.~97.)

PO	SP	HP	FMSI	WVA	TRW
REAR (SHOE ASS'Y)	SA010	HS2006			

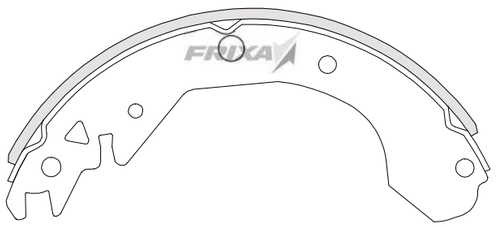

FLD03 — CHEVROLET

PART NUMBER	90272780
REPRESENTATIVE MODEL	LEMANS
INTERCHANGEABLE	LEMANS(86.~97.), ESPERO(OLD)(90.10~94.)

PO	SP	HP	FMSI	WVA	TRW
REAR (SHOE ASS'Y)	SA055-OLD	HS2004			

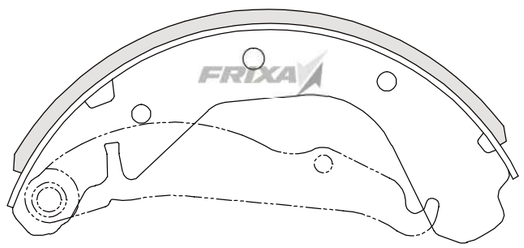

FLD04 — CHEVROLET

PART NUMBER	96226110
REPRESENTATIVE MODEL	ESPERO(NEW)
INTERCHANGEABLE	ESPERO(NEW)(94.~96.12), CIERO(94.~97.), NEXIA(95.~97.), LANOS(96.~03.), NUBIRA I/II(97.~03.)

PO	SP	HP	FMSI	WVA	TRW
REAR (SHOE ASS'Y)	SA055-NEW	HS2005			

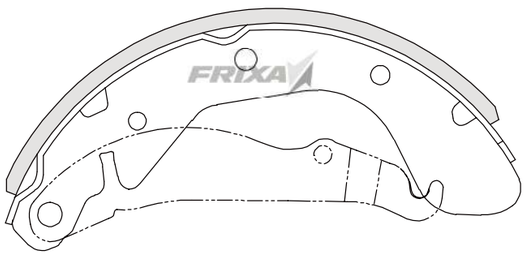

FLD07 — CHEVROLET

PART NUMBER	53200-85800-000
REPRESENTATIVE MODEL	DAMAS
INTERCHANGEABLE	DAMAS, DAMAS II(92.~), LABO(92.~02.)

PO	SP	HP	FMSI	WVA	TRW
REAR (SHOE ASS'Y)	SA059	HS2003			

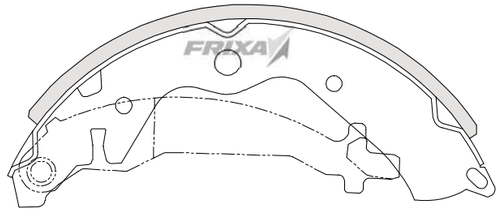

FLD08 — CHEVROLET

PART NUMBER	96245180
REPRESENTATIVE MODEL	LEGANZA
INTERCHANGEABLE	LEGANZA(97.04~02.04), NUBIRA DOHC(97.~99.)

PO	SP	HP	FMSI	WVA	TRW
REAR (SHOE ASS'Y)	SA102	HS2007			GS8748

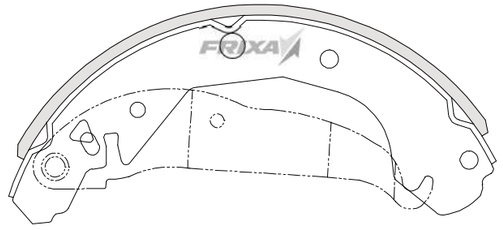

FLD09 — CHEVROLET

PART NUMBER	96349066
REPRESENTATIVE MODEL	REZZO(TACOMA)
INTERCHANGEABLE	REZZO(TACOMA)(00.01~07.02)

PO	SP	HP	FMSI	WVA	TRW
REAR (SHOE ASS'Y)	SA103	HS2008			

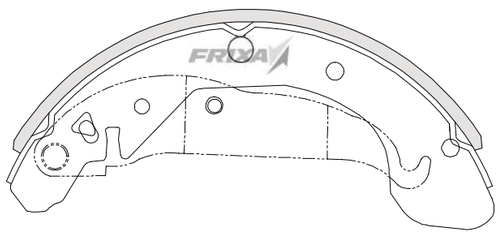

FLD10 — CHEVROLET

PART NUMBER	93740251
REPRESENTATIVE MODEL	KALOS(AVEO)
INTERCHANGEABLE	KALOS(AVEO)(02.05~05.08), MATIZ(SPARK), CREATIVE(09.09~11.02), SPARK(09.09~), GENTRA(05.09~10.05)

PO	SP	HP	FMSI	WVA	TRW
REAR (SHOE ASS'Y)	SA129	HS2009			

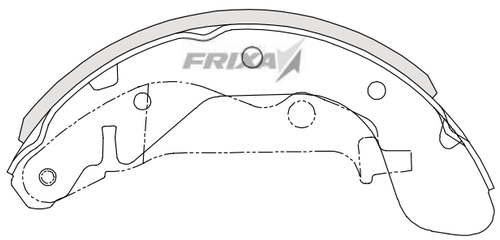

FLD11 — CHEVROLET

PART NUMBER	**P96446745**
REPRESENTATIVE MODEL	MAGNUS(EVANDA)
INTERCHANGEABLE	MAGNUS(EVANDA)(99.12~02.02)

PO	SP	HP	FMSI	WVA	TRW
REAR (SHOE ASS'Y)	SA119				

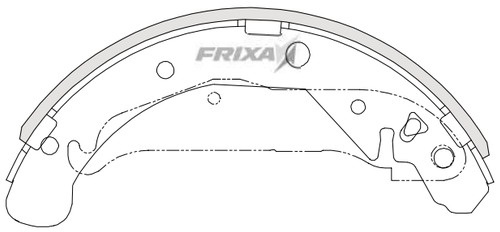

FLD11-1 — CHEVROLET

PART NUMBER	**96496764**
REPRESENTATIVE MODEL	LACETTI
INTERCHANGEABLE	LACETTI, MAGNUS(EVANDA)

PO	SP	HP	FMSI	WVA	TRW
PARKING BRAKE SHOE					

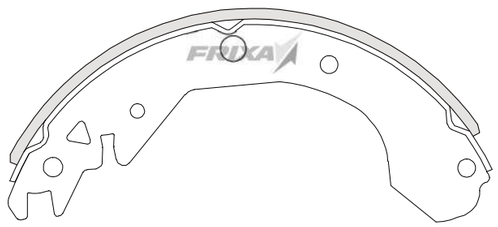

FLH013 — HYUNDAI

PART NUMBER	**58305-22A00**
REPRESENTATIVE MODEL	ACCENT
INTERCHANGEABLE	ACCENT(94.04~99.10)

PO	SP	HP	FMSI	WVA	TRW
REAR (SHOE ASS'Y)	SA047	HS0003			

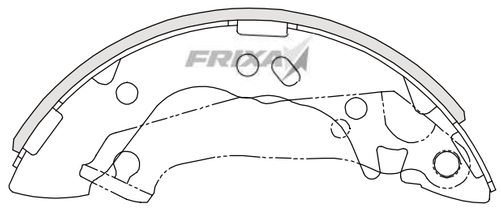

FLH02 — HYUNDAI

PART NUMBER	**58305-34A10**
REPRESENTATIVE MODEL	SONATA
INTERCHANGEABLE	SONATA I/II/III(88.06~98.04), STELLAR(83.07~97.01) SANTAMO(96.01~02.12), CARSTA(99.05~03.03)

PO	SP	HP	FMSI	WVA	TRW
REAR (SHOE ASS'Y)	SA048	HS0005			GS6152

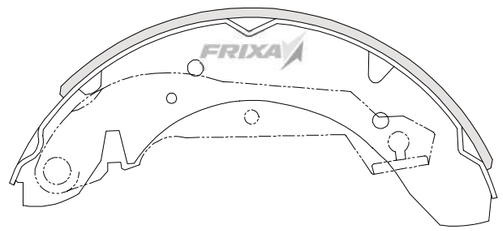

FLH01 — HYUNDAI

PART NUMBER	**58305-17A00**
REPRESENTATIVE MODEL	AVANTE(ELANTRA)
INTERCHANGEABLE	AVANTE(ELANTRA)(95.03~00.04), AVANTE(ELANTRA) XD(00.03~04.04),NEW AVANTE(ELANTRA) XD(04.05~06.05)

PO	SP	HP	FMSI	WVA	TRW
REAR (SHOE ASS'Y)	SA062	HS0002			

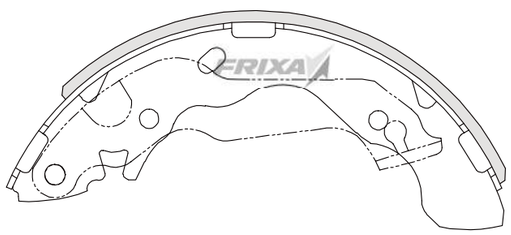

FLH012 — HYUNDAI

PART NUMBER	**58305-24000**
REPRESENTATIVE MODEL	EXCEL
INTERCHANGEABLE	EXCEL(85.02~94.07), SCOUPE(90.02~95.02) VERNA(ACCENT)(OLD)(99.06~02.07), ACCENT (LC) (00~02)

PO	SP	HP	FMSI	WVA	TRW
REAR (SHOE ASS'Y)	SA046	HS0001			

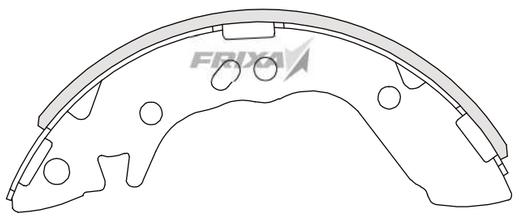

FLH02F — HYUNDAI

PART NUMBER	**58305-38A00**
REPRESENTATIVE MODEL	EF SONATA
INTERCHANGEABLE	EF SONATA(98.04~04.08), LAVITA(00.04~02.03), SANTAMO PLUS(96.01~02.12), OPTIMA(98.06~05.10)

PO	SP	HP	FMSI	WVA	TRW
REAR (SHOE ASS'Y)	SA111	HS0007			

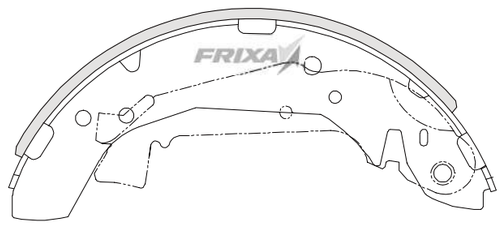

FLH06 — HYUNDAI

PART NUMBER	**48250-01000**
REPRESENTATIVE MODEL	NEW GRACE(H100)
INTERCHANGEABLE	NEW GRACE(H100)(94.05~03.12), GALLOPER(99.01~02.01) MUSSO(02.03~08.08), ISTANA(95.~03.06)

PO	SP	HP	FMSI	WVA	TRW
REAR (SHOE ASS'Y)	SA072-GR	HS0012			GS8155

FLH07 — HYUNDAI

PART NUMBER	**58305-4BA00**
REPRESENTATIVE MODEL	PORTER
INTERCHANGEABLE	PORTER(96.03~03.12)

PO	SP	HP	FMSI	WVA	TRW
REAR (SHOE ASS'Y)	SA072-PO	HS0011			

FLH09 — HYUNDAI

PART NUMBER	**58305-4AA00**
REPRESENTATIVE MODEL	STAREX(H1)
INTERCHANGEABLE	STAREX(H1)(97.03~02.09), GALLOPER II(02.01~03.12)

PO	SP	HP	FMSI	WVA	TRW
REAR (SHOE ASS'Y)	SA099	HS0009			GS8696

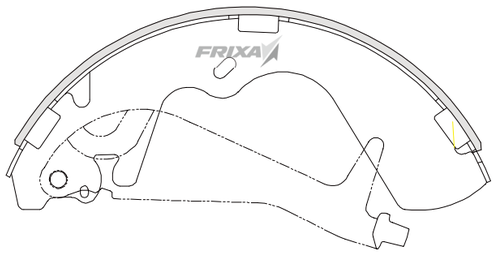

FLH10 — HYUNDAI

PART NUMBER	**58305-02500**
REPRESENTATIVE MODEL	ATOZ(SANTRO)
INTERCHANGEABLE	ATOZ(SANTRO)(97.09~02.12), VISTO(98.02~04.01)

PO	SP	HP	FMSI	WVA	TRW
REAR (SHOE ASS'Y)	SA096	HS0008			GS8659

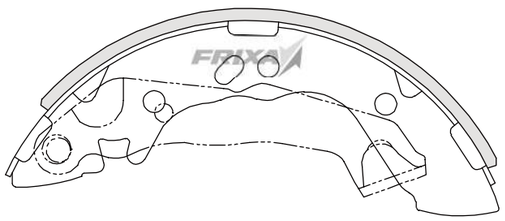

FLH11 — HYUNDAI

PART NUMBER	**58305-47A00**
REPRESENTATIVE MODEL	LIBERO
INTERCHANGEABLE	LIBERO(97.03~03.11)

PO	SP	HP	FMSI	WVA	TRW
REAR (SHOE ASS'Y)	SA100	HS0013			

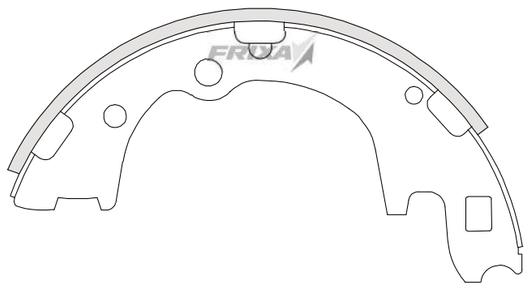

FLH12 — HYUNDAI

PART NUMBER	**58305-1CA00**
REPRESENTATIVE MODEL	CLICK(GETZ)
INTERCHANGEABLE	CLICK(GETZ)(02.05~07.05)

PO	SP	HP	FMSI	WVA	TRW
REAR (SHOE ASS'Y)	SA132				GS8737

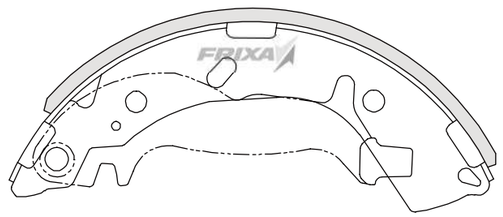

FLH13 — HYUNDAI

PART NUMBER	**58305-4AA20**
REPRESENTATIVE MODEL	STAREX(H1) NEW
INTERCHANGEABLE	STAREX(NEW)(02.12~07.05)

PO	SP	HP	FMSI	WVA	TRW
REAR (SHOE ASS'Y)	SA130	HS0010	S1003		

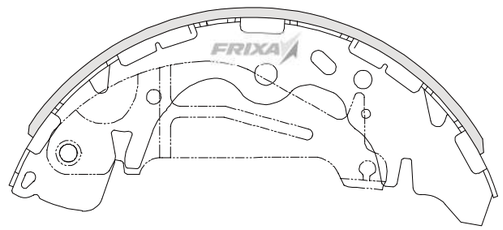

FLH14 — HYUNDAI

PART NUMBER	**58305-4FA01**
REPRESENTATIVE MODEL	PORTER II(LOW DECK)
INTERCHANGEABLE	PORTER II(LOW DECK)(04.01~), BONGO III(LOW DECK)(04.01~)

PO	SP	HP	FMSI	WVA	TRW
REAR (SHOE ASS'Y)	SA135				GS8428

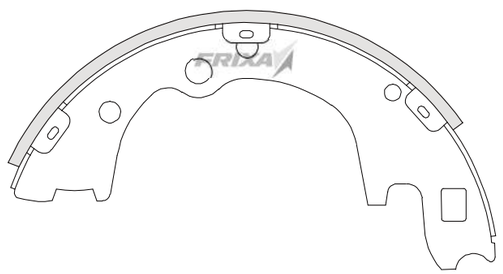

FLH16 — HYUNDAI

PART NUMBER	**58305-4BA20**
REPRESENTATIVE MODEL	PORTER(HIGH DECK)
INTERCHANGEABLE	

PO	SP	HP	FMSI	WVA	TRW
REAR (SHOE ASS'Y)	SA140				

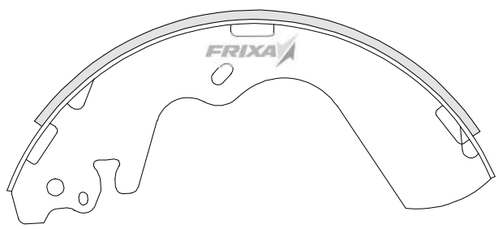

FLH17 — HYUNDAI

PART NUMBER	**58305-4HA00**
REPRESENTATIVE MODEL	GRAND STAREX(H1)
INTERCHANGEABLE	GRAND STAREX(H1)(07.05~)

PO	SP	HP	FMSI	WVA	TRW
REAR (SHOE ASS'Y)	SA141				

FLK01 — KIA

PART NUMBER	**KK150-26310**
REPRESENTATIVE MODEL	PRIDE
INTERCHANGEABLE	PRIDE/BETA(86.~99.)

PO	SP	HP	FMSI	WVA	TRW
REAR (SHOE ASS'Y)	SA049	HS1001			GS8519

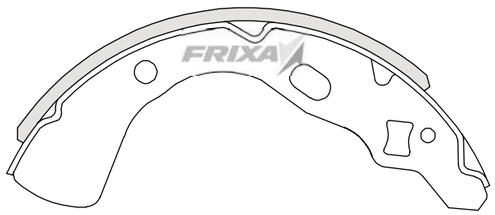

FLK02 — KIA

PART NUMBER	**0K917-2638Z**
REPRESENTATIVE MODEL	CONCORD
INTERCHANGEABLE	CONCORD(87.~96.01), CAPITAL(89.~96.01)

PO	SP	HP	FMSI	WVA	TRW
REAR (SHOE ASS'Y)	SA052				

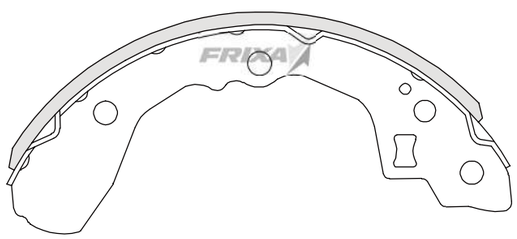

FLKT02 — KIA

PART NUMBER	**0K201-26-38Z**
REPRESENTATIVE MODEL	CONCORD for Taxi
INTERCHANGEABLE	CONCORD(87.~96.01), SEPIA, TOWNER,

PO	SP	HP	FMSI	WVA	TRW
REAR (SHOE ASS'Y)	SA051				

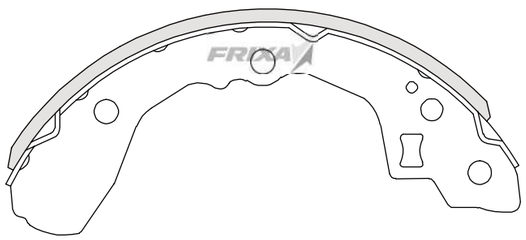

FLK03 — KIA

PART NUMBER	**0K23N-2638Z**
REPRESENTATIVE MODEL	SEPHIA
INTERCHANGEABLE	SEPHIA(NEW)/II(97.03~00.06), SPECTRA(01.02~03.07) SHUMA(97.03~99.)

PO	SP	HP	FMSI	WVA	TRW
REAR (SHOE ASS'Y)	SA053	HS1006			GS8692

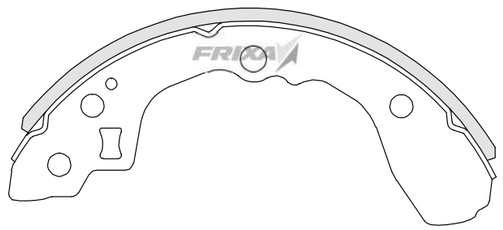

FLK04 — KIA

PART NUMBER	**0K2FA-2638Z**
REPRESENTATIVE MODEL	CARENS(RONDO)
INTERCHANGEABLE	CREDOS I/II(95.03~00.07), CARENS(RONDO) I/II(99.06~06.03)

PO	SP	HP	FMSI	WVA	TRW
REAR (SHOE ASS'Y)	SA079	HS1007			

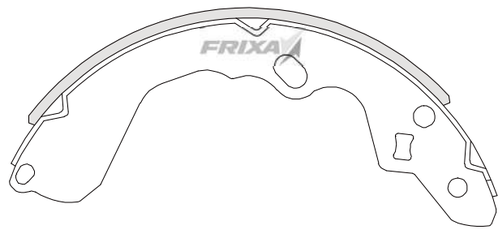

FLK07 — KIA

PART NUMBER	**0K011-2638Z**
REPRESENTATIVE MODEL	SPORTAGE
INTERCHANGEABLE	SPORTAGE(93.06~99.02)

PO	SP	HP	FMSI	WVA	TRW
REAR (SHOE ASS'Y)	SA070	HS1008			

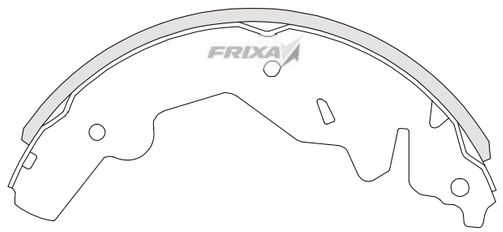

FLK08 — KIA

PART NUMBER	**0K70Y-2638Z**
REPRESENTATIVE MODEL	BESTA
INTERCHANGEABLE	BESTA(87.07~97.04), TOPIC(87.~91.), BONGO(NEW)(94.~94.04) PORTER II(HIGH DECK)(04.01~), BONGO III(HIGH DECK)(04.01~)

PO	SP	HP	FMSI	WVA	TRW
REAR (SHOE ASS'Y)	SA044	HS1011			GS8523

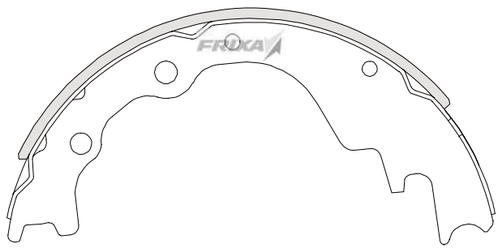

FLK082 — KIA

PART NUMBER	**0K71F-3328Z**
REPRESENTATIVE MODEL	WIDE BONGO
INTERCHANGEABLE	WIDE BONGO(94.01~97.06), FRONTIER1.3TON(NEW)(01.~03.12) FRONTIER1.4TON(NEW)(01.~03.12)

PO	SP	HP	FMSI	WVA	TRW
REAR (SHOE ASS'Y)	SA045	HS1010			GS8428

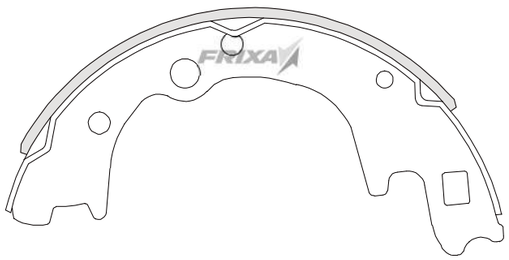

FLK10 — KIA

PART NUMBER	**0K72A-2638Z**
REPRESENTATIVE MODEL	PREGIO
INTERCHANGEABLE	PREGIO(95.10~98.05)

PO	SP	HP	FMSI	WVA	TRW
REAR (SHOE ASS'Y)	SA044	HS1011			

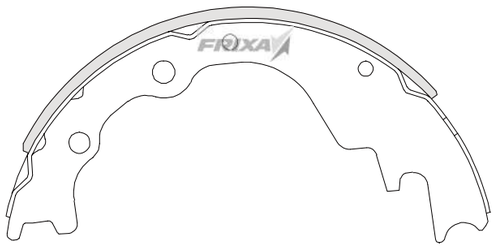

FLK10N — KIA

PART NUMBER	**0K79A-2638Z**
REPRESENTATIVE MODEL	PREGIO GRAND
INTERCHANGEABLE	NEW PREGIO(98.06~03.02), BONGO III VAN(15SEAT)(04.01~)

PO	SP	HP	FMSI	WVA	TRW
REAR (SHOE ASS'Y)	SA127	HS1013			

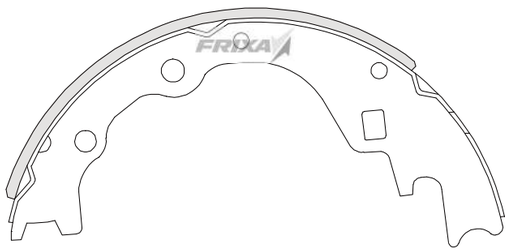

FLK13 — KIA

PART NUMBER	**0K552-2638Z**
REPRESENTATIVE MODEL	CARNIVAL(SEDONA)
INTERCHANGEABLE	CARNIVAL(SEDONA)(98.01~99.01). TRAJET XG(99.12~01.08)

PO	SP	HP	FMSI	WVA	TRW
REAR (SHOE ASS'Y)	SA112	HS1012	S714-1485ATT		GS8643

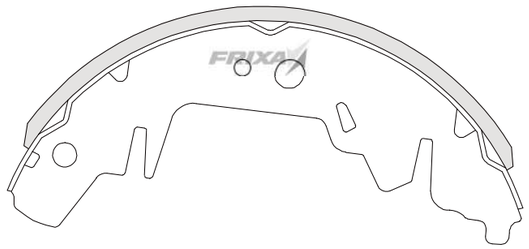

FLK13N — KIA

PART NUMBER	**0K56A-2638Z**
REPRESENTATIVE MODEL	CARNIVAL(SEDONA)(NEW)
INTERCHANGEABLE	CARNIVAL(SEDONA) II(99.01~03.12), TRAJET XG(01.09~03.12)

PO	SP	HP	FMSI	WVA	TRW
REAR (SHOE ASS'Y)	SA020	HS1014			GS8441

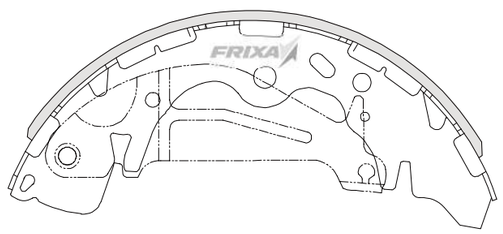

FLK14 — KIA

PART NUMBER	**01823-2638Z**
REPRESENTATIVE MODEL	CERES
INTERCHANGEABLE	CERES(83.~94.), BONGO(OLD)(~94.)

PO	SP	HP	FMSI	WVA	TRW
REAR (SHOE ASS'Y)	SA015				GS8120

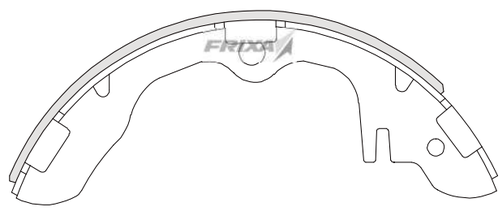

FLK14N — KIA

PART NUMBER	**0K68A-3328Z**
REPRESENTATIVE MODEL	CERES(NEW)
INTERCHANGEABLE	CERES(NEW)(94.~96.)

PO	SP	HP	FMSI	WVA	TRW
REAR (SHOE ASS'Y)	SA019				

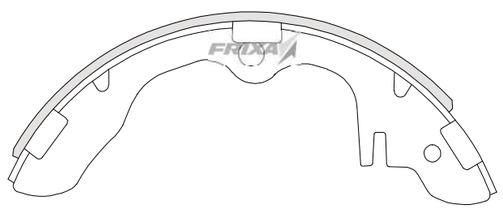

FLK15 — KIA

PART NUMBER	**0K30A-2628Z**
REPRESENTATIVE MODEL	RIO
INTERCHANGEABLE	RIO(99.11~02.05)

PO	SP	HP	FMSI	WVA	TRW
REAR (SHOE ASS'Y)	SA137	HS1002			

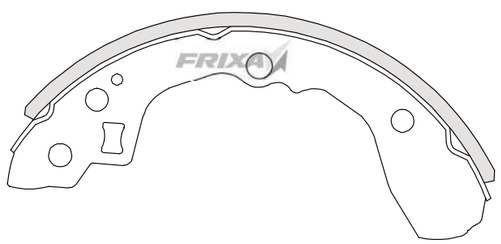

FLK15N — KIA

PART NUMBER	**0K30B-2628Z**
REPRESENTATIVE MODEL	RIO SF
INTERCHANGEABLE	RIO SF(02.06~05.04)

PO	SP	HP	FMSI	WVA	TRW
REAR (SHOE ASS'Y)	SA134	HS1003			

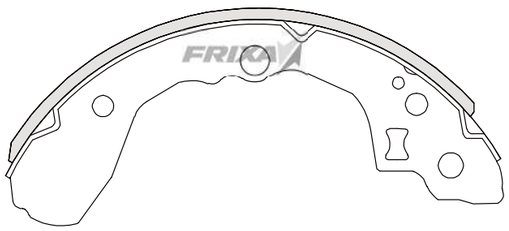

FLK16 — KIA

PART NUMBER	**0K045-2638Z**
REPRESENTATIVE MODEL	ROCSTA R2
INTERCHANGEABLE	ROCSTA R2(92.~97.), SPORTAGE GRAND(00.~02.), RETONA(00.~02.)

PO	SP	HP	FMSI	WVA	TRW
REAR (SHOE ASS'Y)	SA018				GS8682

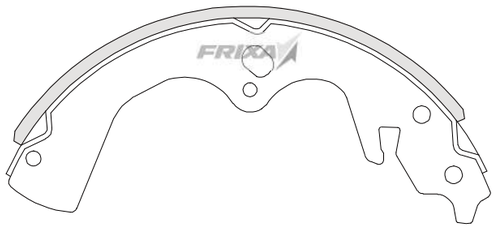

FLK17 — KIA

PART NUMBER	**K611-2638Z**
REPRESENTATIVE MODEL	FRONTIER1.3
INTERCHANGEABLE	FRONTIER1.3TON(OLD)(99.06~01.), FRONTIER1.4TON(OLD)(99.06~01.)

PO	SP	HP	FMSI	WVA	TRW
REAR (SHOE ASS'Y)					

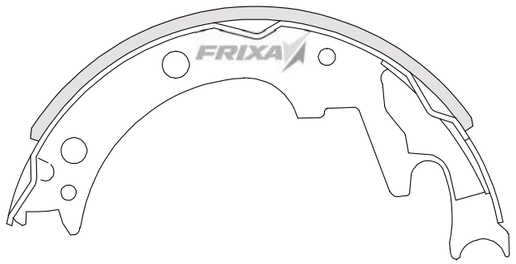

FLK18 — KIA

PART NUMBER	**58305-1GA00**
REPRESENTATIVE MODEL	PRIDE(NEW)
INTERCHANGEABLE	PRIDE 05MY(NEW RIO) (05.08~11.10), VERNA(ACCENT) 05MY(05.08~10.12)

PO	SP	HP	FMSI	WVA	TRW
REAR (SHOE ASS'Y)	SA153		S910-1616		GS8766

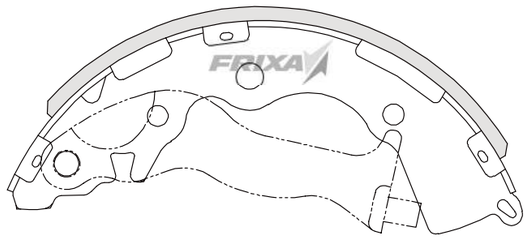

FLK19 — KIA

PART NUMBER	**58350-07A00**
REPRESENTATIVE MODEL	MORNING(PICANTO)
INTERCHANGEABLE	MORNING(PICANTO)(04.01~)

PO	SP	HP	FMSI	WVA	TRW
REAR (SHOE ASS'Y)	SA154				GS8754

FLK20 — KIA

PART NUMBER	**58350-1MA00**
REPRESENTATIVE MODEL	FORTE
INTERCHANGEABLE	FORTE(08.08~)

PO	SP	HP	FMSI	WVA	TRW
REAR (SHOE ASS'Y)	SA155				

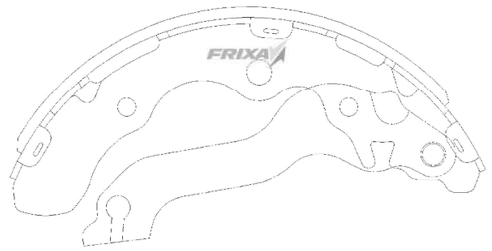

FLK21 — KIA

PART NUMBER	**58350-2KA00**
REPRESENTATIVE MODEL	SOUL
INTERCHANGEABLE	SOUL

PO	SP	HP	FMSI	WVA	TRW
REAR (SHOE ASS'Y)					

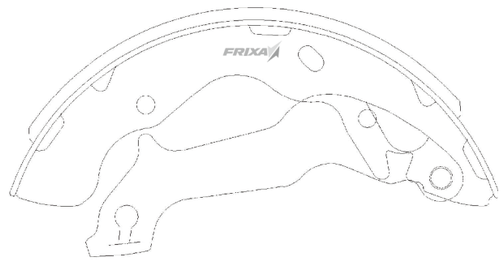

FLK22 — KIA

PART NUMBER	**58350-1YA00**
REPRESENTATIVE MODEL	PICANTO 11MY R
INTERCHANGEABLE	PICANTO 11MY (11.02~)

PO	SP	HP	FMSI	WVA	TRW
REAR (SHOE ASS'Y)	SA156				

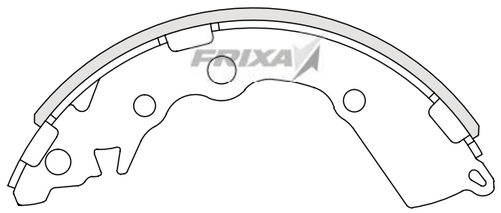

FLS01 — RENAULT SAMSUNG

PART NUMBER	**48430-31010K0**
REPRESENTATIVE MODEL	SM-3
INTERCHANGEABLE	SM-3(02.~)

PO	SP	HP	FMSI	WVA	TRW
REAR (SHOE ASS'Y)	SA131				

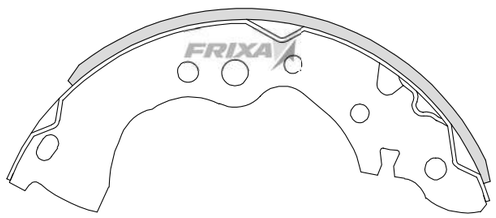

FPD01 — CHEVROLET

PART NUMBER	**4BP3659-08264**
REPRESENTATIVE MODEL	TICO
INTERCHANGEABLE	TICO(91.~00.09)

PO	SP	HP	FMSI	WVA	TRW
FRONT (PAD)	SP1050	HP2001		23061	GDB3108

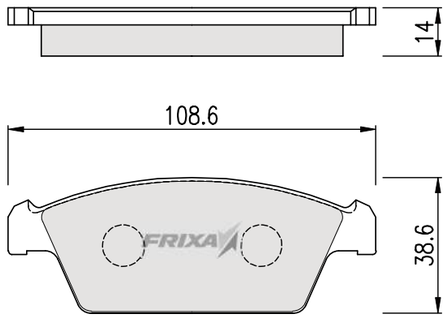

FPD05 — CHEVROLET

PART NUMBER	**11046952012**
REPRESENTATIVE MODEL	ESPERO2.0
INTERCHANGEABLE	ESPERO2.0(TEVESE), PRINCE(TEVESE)

PO	SP	HP	FMSI	WVA	TRW
FRONT (PAD)	SP1078	HP2004	D796-7666	21190	GDB951

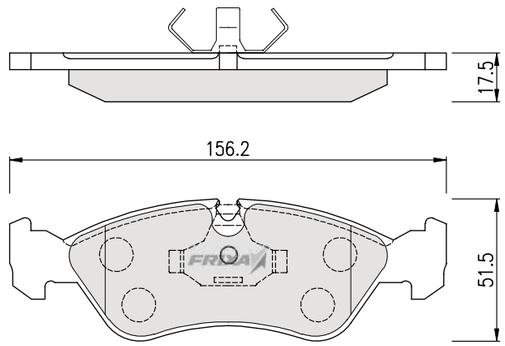

FPD06 — CHEVROLET

PART NUMBER	**96281937**
REPRESENTATIVE MODEL	NEW PRINCE
INTERCHANGEABLE	NEW PRINCE(92.~97.), LANOS DOHC(96.~03.) BROUGHAM(NEW)(95.~97.), NUBIRA, ESPERO, CIELO

PO	SP	HP	FMSI	WVA	TRW
FRONT (PAD)	SP1077	HP2005			GDB3265

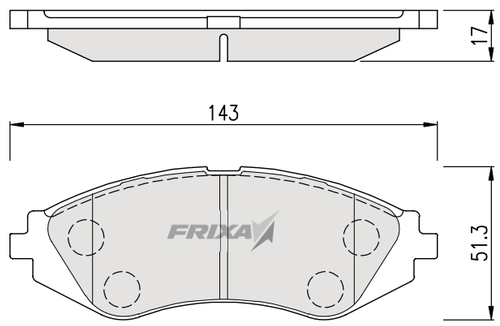

FPD02 — CHEVROLET

PART NUMBER	**96101972S**
REPRESENTATIVE MODEL	LEMANS
INTERCHANGEABLE	LEMANS(86.~97.) ROYALE PRINCE(~92.), BROUGHAM(93.~95.)

PO	SP	HP	FMSI	WVA	TRW
FRONT (PAD)	SP1055	HP2003	D378-7267	20939	GDB199

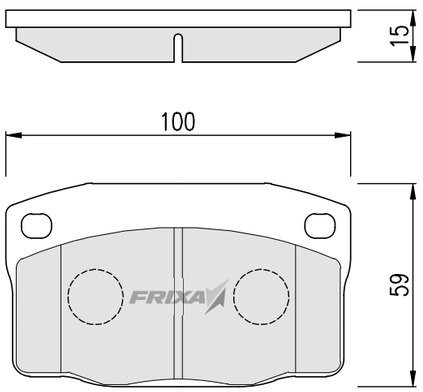

FPD03 — CHEVROLET

PART NUMBER	**96133555S**
REPRESENTATIVE MODEL	ESPERO1.5
INTERCHANGEABLE	ESPERO1.5(90.10~96.12), CIELO(94.~97.) NEXIA(95.~97.)

PO	SP	HP	FMSI	WVA	TRW
FRONT (PAD)	SP1055	HP2003	D378-7267	20939	GDB199

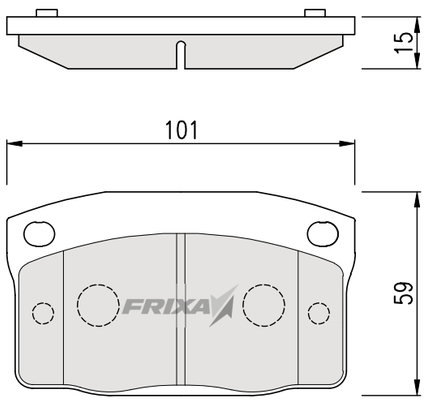

FPD07 — CHEVROLET

PART NUMBER	**45022-SA0999HE**
REPRESENTATIVE MODEL	DAMAS
INTERCHANGEABLE	DAMAS(92.~03.08), DAMAS II(03.09~), LABO(92.~02.)

PO	SP	HP	FMSI	WVA	TRW
FRONT (PAD)	SP1059	HP2013	D177-7104	20731	GDB254

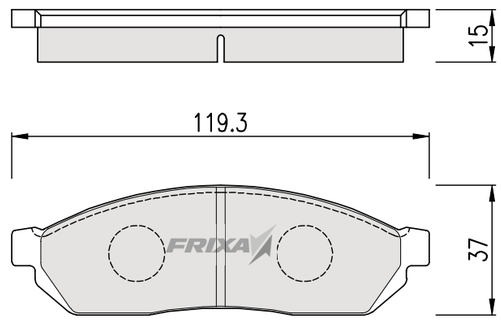

FPD08 — CHEVROLET

PART NUMBER	**S4510009N**
REPRESENTATIVE MODEL	LEGANZA
INTERCHANGEABLE	LEGANZA(97.12~02.04), NUBIRA DOHC(97.~99.) NUBIRA II(99.~03.)

PO	SP	HP	FMSI	WVA	TRW
FRONT (PAD)	SP1102	HP2006	D797-7668	23234	GDB3216

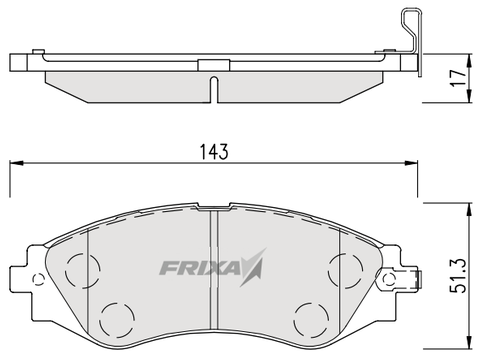

FPD08R — CHEVROLET

PART NUMBER	**96245179**
REPRESENTATIVE MODEL	LEGANZA R
INTERCHANGEABLE	LEGANZA(97.~03.), NUBIRA(97.~03.)

PO	SP	HP	FMSI	WVA	TRW
REAR (PAD)	SP1114	HP2007	D724-7591	23237	GDB3172

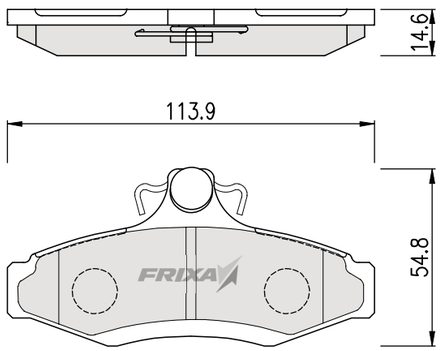

FPD09 — CHEVROLET

PART NUMBER	**96281945**
REPRESENTATIVE MODEL	MATIZ(SPARK)
INTERCHANGEABLE	LANOS SOHC(96.~03.), MATIZ(SPARK) I/II/III(98.~09.08)

PO	SP	HP	FMSI	WVA	TRW
FRONT (PAD)	SP1086	HP2002	8433-D1321	23241	GDB3195

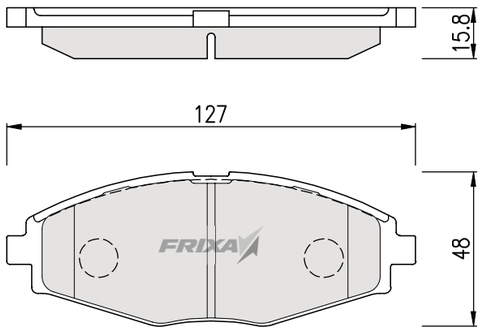

FPD10 — CHEVROLET

PART NUMBER	**96349059**
REPRESENTATIVE MODEL	MAGNUS(EVANDA)
INTERCHANGEABLE	MAGNUS(EVANDA)(99.12~02.02), MAGNUS(EVANDA) L6 2.0(02.03~06.01),

PO	SP	HP	FMSI	WVA	TRW
FRONT (PAD)	SP1103	HP2008		24062	GDB3345

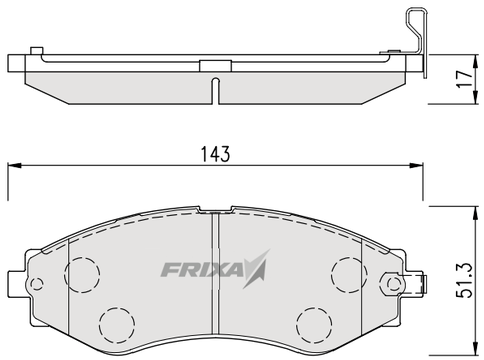

FPD10R — CHEVROLET

PART NUMBER	**55500-86Z00**
REPRESENTATIVE MODEL	MAGNUS(EVANDA) R
INTERCHANGEABLE	MAGNUS(EVANDA)(99.12~06.01), TOSCA(EPICA)(06.02~10.12) , EPICA(11.03~)

PO	SP	HP	FMSI	WVA	TRW
REAR (PAD)	SP1252	HP2009	D1030-7935	23994	GDB3346

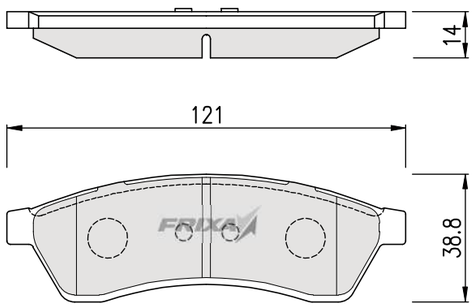

FPD12 — CHEVROLET

PART NUMBER	**96405129**
REPRESENTATIVE MODEL	LACETTI(OPTRA)
INTERCHANGEABLE	LACETTI(OPTRA)(02.11~), GENTRA X(14")(07.10~10.05)

PO	SP	HP	FMSI	WVA	TRW
FRONT (PAD)	SP1159	HP2012	D902-7779	23234	GDB3171

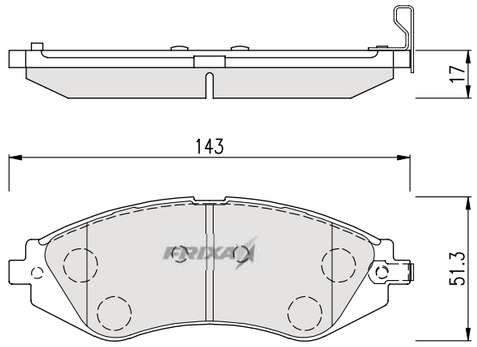

FPD12NR — CHEVROLET

PART NUMBER	**55500-85Z10**
REPRESENTATIVE MODEL	LACETTI(OPTRA) 06MY R
INTERCHANGEABLE	LACETTI(OPTRA) 06MY(06.05~10.11)

PO	SP	HP	FMSI	WVA	TRW
REAR (PAD)	SP1257		D1315-7939		

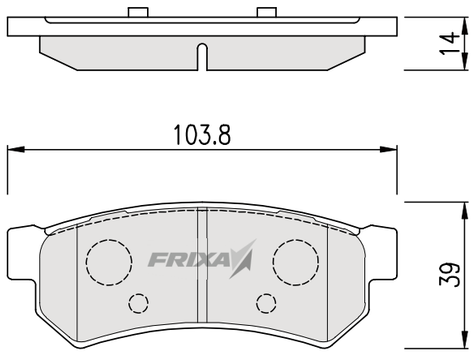

FPD12R — CHEVROLET

PART NUMBER	**55500-85Z00**
REPRESENTATIVE MODEL	LACETTI(OPTRA) R
INTERCHANGEABLE	LACETTI(OPTRA)(02.11~06.04)

PO	SP	HP	FMSI	WVA	TRW
REAR (PAD)	SP1160	HP1024	D1036-7939	24071	GDB3348

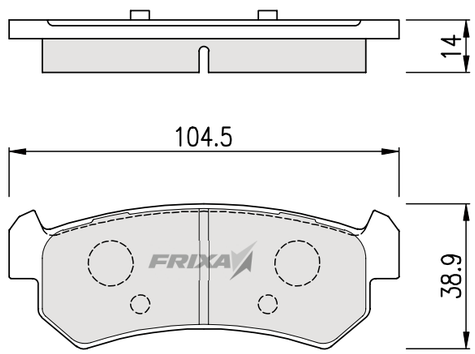

FPD13 — CHEVROLET

PART NUMBER	**94566892**
REPRESENTATIVE MODEL	KALOS(AVEO)
INTERCHANGEABLE	KALOS(AVEO)(02.05~05.08), GENTRA(05.09~10.05) GENTRA X(13")(07.10~10.05), NUBIRA SOCH(97.02~02.10)

PO	SP	HP	FMSI	WVA	TRW
FRONT (PAD)	SP1158	HP2011	D1269-8385	23974	GDB3330

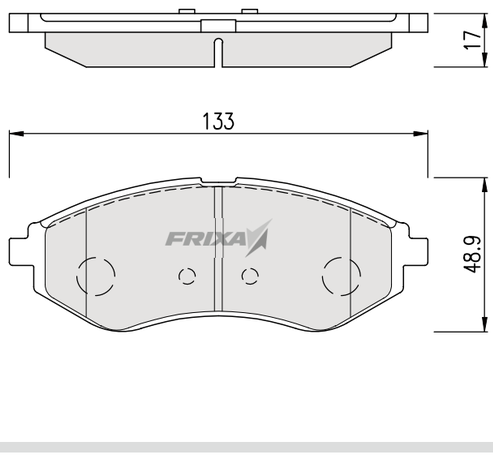

FPD(T)14 — CHEVROLET

PART NUMBER	**96475026**
REPRESENTATIVE MODEL	TOSCA(EPICA)
INTERCHANGEABLE	TOSCA(EPICA)(06.02~10.12) MAGNUS(EVANDA) L6 2.5(02.12~06.01), EPICA(11.03~)

PO	SP	HP	FMSI	WVA	TRW
FRONT (PAD)	SP1193		D1031-7936		

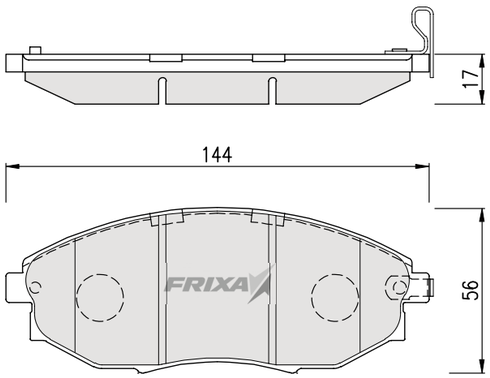

FPD15 — CHEVROLET

PART NUMBER	**45022-S10A00**
REPRESENTATIVE MODEL	ARCADIA
INTERCHANGEABLE	ARCADIA(94.02~99.)

PO	SP	HP	FMSI	WVA	TRW
FRONT (PAD)	SP1076-F	HP2010	D503-7382	21651	GDB995

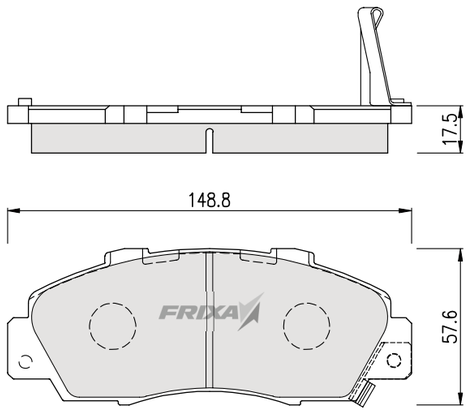

FPD17 — CHEVROLET

PART NUMBER	**13301207**
REPRESENTATIVE MODEL	LACETTI PREMIERE(CRUZE)
INTERCHANGEABLE	LACETTI PREMIERE GASOLINE(08.12~) CRUZE(11.03~), AVEO 15"(11.03~)

PO	SP	HP	FMSI	WVA	TRW
FRONT (PAD)	SP1362		D1522-8730	25076	

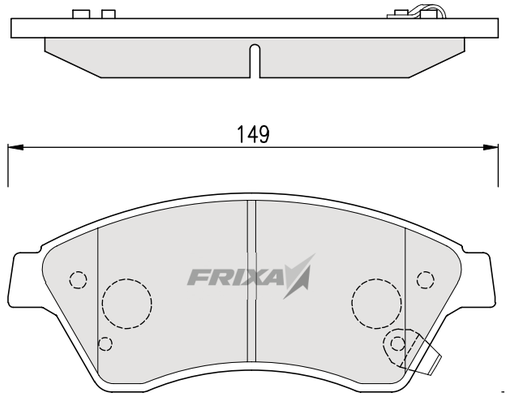

FPD17R — CHEVROLET

PART NUMBER	**13300867**
REPRESENTATIVE MODEL	LACETTI PREMIERE(CRUZE) R
INTERCHANGEABLE	LACETTI PREMIERE(CRUZE)(08.12~), ORLANDO(11.03~) TRAX(13.02~), CRUZE(11.03~)

PO	SP	HP	FMSI	WVA	TRW
REAR (PAD)	SP1363		D1468-8668	25096	GDB1844

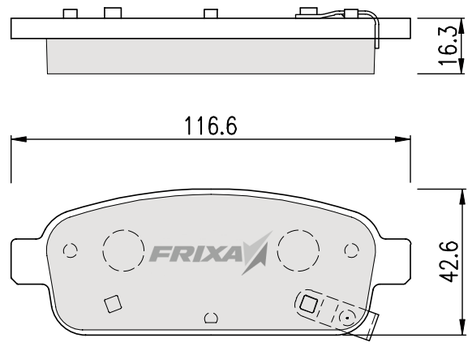

FPD16 — CHEVROLET

PART NUMBER	**20789468**
REPRESENTATIVE MODEL	WINSTORM(CAPTIVA)
INTERCHANGEABLE	WINSTORM(CAPTIVA)(06.06~10.12), CAPTIVA(11.03~)

PO	SP	HP	FMSI	WVA	TRW
FRONT (PAD)	SP1204		D1678-8907	24510	GDB1715

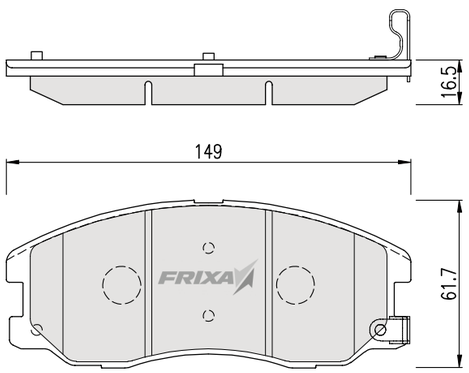

FPD16R — CHEVROLET

PART NUMBER	**19149904**
REPRESENTATIVE MODEL	WINSTORM(CAPTIVA) R
INTERCHANGEABLE	WINSTORM(CAPTIVA)(06.06~10.12), CAPTIVA(11.03~)

PO	SP	HP	FMSI	WVA	TRW
REAR (PAD)	SP1205		D1275-8391	24498	GDB1716

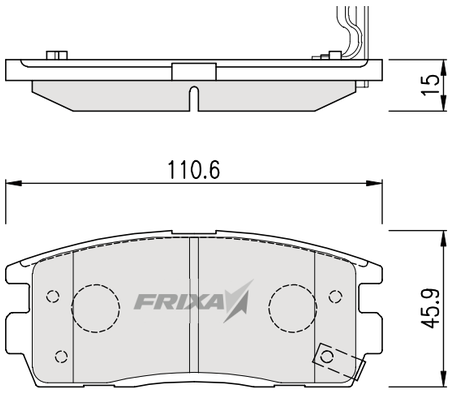

FPD18 — CHEVROLET

PART NUMBER	**P94564512**
REPRESENTATIVE MODEL	SPARK
INTERCHANGEABLE	SPARK(11.03~), MATIZ(SPARK) CREATIVE(09.09~11.02)

PO	SP	HP	FMSI	WVA	TRW
FRONT (PAD)	SP1392		D1590-8801	25268	

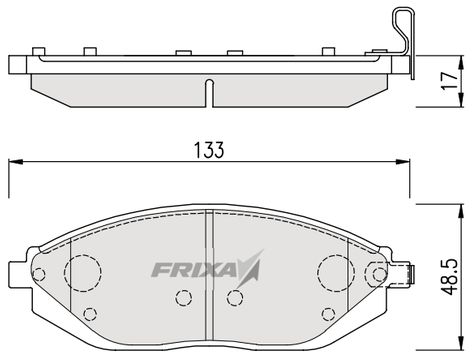

FPD19 — CHEVROLET

PART NUMBER	**13237753**
REPRESENTATIVE MODEL	ALPHEON
INTERCHANGEABLE	ALPHEON(10.09~), MALIBU(11.10~)

PO	SP	HP	FMSI	WVA	TRW
FRONT (PAD)	SP1402		D1421-8536	24415	

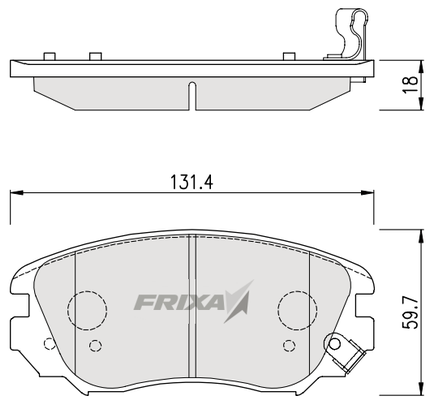

FPD19R — CHEVROLET

PART NUMBER	**13237768**
REPRESENTATIVE MODEL	ALPHEON R
INTERCHANGEABLE	ALPHEON(10.09~), MALIBU(11.10~)

PO	SP	HP	FMSI	WVA	TRW
FRONT (PAD)	SP2135		D1430-8547	24421	

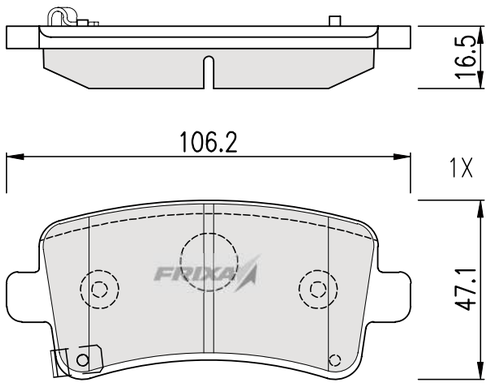

FPD20 — CHEVROLET

PART NUMBER	**13301234**
REPRESENTATIVE MODEL	ORLANDO
INTERCHANGEABLE	ORLANDO(11.02~), LACETTI PREMIERE DISEL(08.12~), TRAX(13.02~)

PO	SP	HP	FMSI	WVA	TRW
FRONT (PAD)	SP1480		D1467-8667	25079	

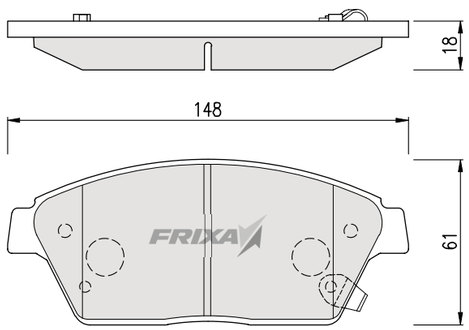

FPD21 — CHEVROLET

PART NUMBER	**95025848**
REPRESENTATIVE MODEL	AVEO 14MY
INTERCHANGEABLE	WINSTORM(CAPTIVA)(06.06~10.12), CAPTIVA(11.03~)

PO	SP	HP	FMSI	WVA	TRW
FRONT (PAD)	SP1481		D1702-8926		

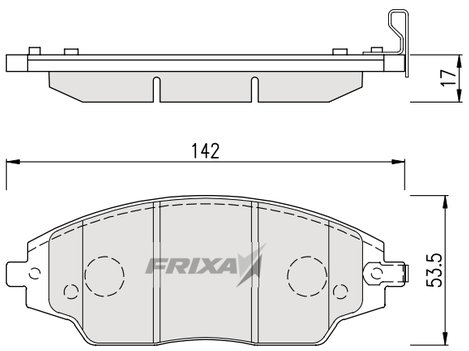

FPD22 — CHEVROLET

PART NUMBER	**42349237**
REPRESENTATIVE MODEL	THE NEXT SPARK 14"
INTERCHANGEABLE	

PO	SP	HP	FMSI	WVA	TRW
FRONT (PAD)	SP1836				

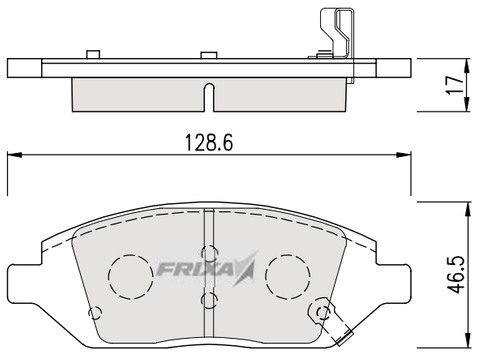

FPD23 — CHEVROLET

PART NUMBER	**42349238**
REPRESENTATIVE MODEL	THE NEXT SPARK 15"
INTERCHANGEABLE	

PO	SP	HP	FMSI	WVA	TRW
FRONT (PAD)	SP1837		D1864-9093		

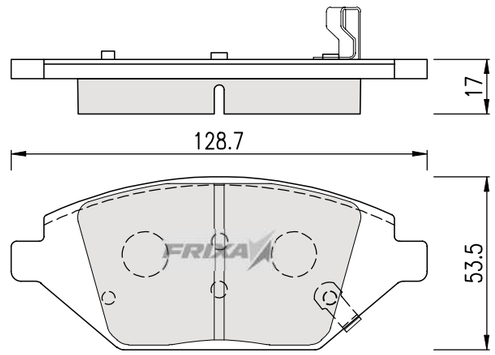

FPD24 — CHEVROLET

PART NUMBER	**23326280**
REPRESENTATIVE MODEL	ALL NEW MALIBU
INTERCHANGEABLE	

PO	SP	HP	FMSI	WVA	TRW
FRONT (PAD)	SP1981		D1913-9144		

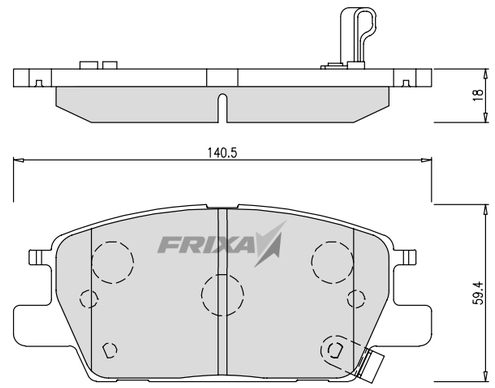

FPD24R — CHEVROLET

PART NUMBER	**13595651**
REPRESENTATIVE MODEL	ALL NEW MALIBU
INTERCHANGEABLE	

PO	SP	HP	FMSI	WVA	TRW
REAR (PAD)	SP1929				

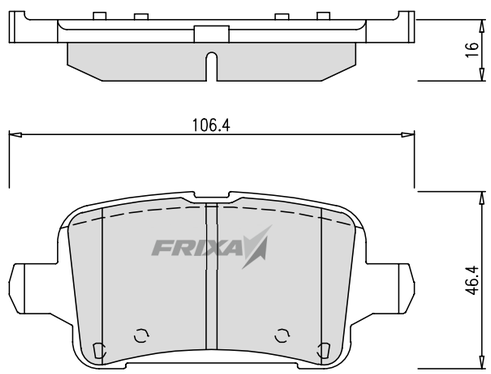

FPH01 — HYUNDAI

PART NUMBER	**58101-1CA00**
REPRESENTATIVE MODEL	AVANTE(ELANTRA)
INTERCHANGEABLE	AVANTE(ELANTRA)(95.03~00.04) ,ELANTRA(88.02~94.07) EXCEL(85.02~94.07), ACCENT(94.04~99.10)

PO	SP	HP	FMSI	WVA	TRW
REAR (PAD)	SP1047	HP0004	D404-7293	21012	GDB3331

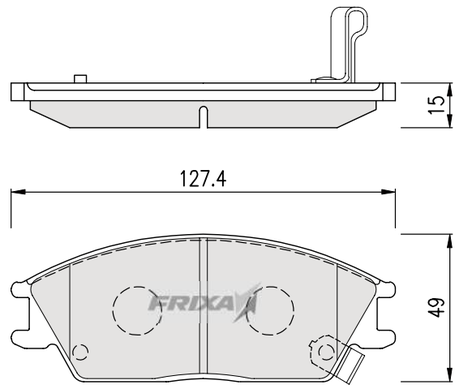

FPH01R — HYUNDAI

PART NUMBER	**44060-08E91**
REPRESENTATIVE MODEL	AVANTE(ELANTRA) R
INTERCHANGEABLE	ELANTRA(88.02~94.07), TIBURON,TURBULENCE(96.04~01.08) TUSCANI(COUPE)2.0/2.7(01.09~08.07)

PO	SP	HP	FMSI	WVA	TRW
REAR (PAD)	SP1062	HP0021	D323-7146	21553	GDB1010

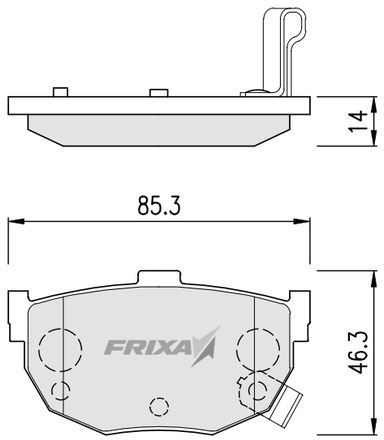

FPH02 — HYUNDAI

PART NUMBER	**58101-28A00**
REPRESENTATIVE MODEL	SONATA
INTERCHANGEABLE	SONATA(88.06~93.04), SONATA II(93.05~96.02) MARCIA(95.03~97.10), ELANTRA1.6/1.8(88.02~94.07)

PO	SP	HP	FMSI	WVA	TRW
FRONT (PAD)	SP1048	HP0003	D449-7329	21725	GDB3101

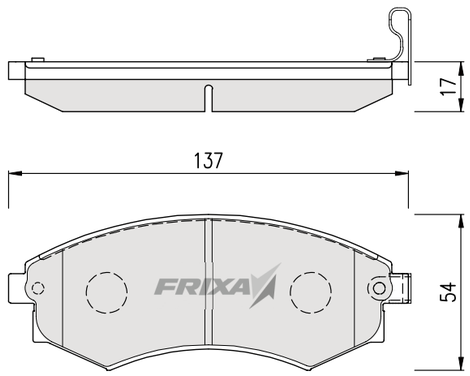

FPH02NR — HYUNDAI

PART NUMBER	**43022-SD4000**
REPRESENTATIVE MODEL	SONATA R
INTERCHANGEABLE	SONATA II/III(93.06~98.03), MARCIA(95.03~98.05)

PO	SP	HP	FMSI	WVA	TRW
REAR (PAD)	SP1074	HP0005	D342-7236	20029	GDB994

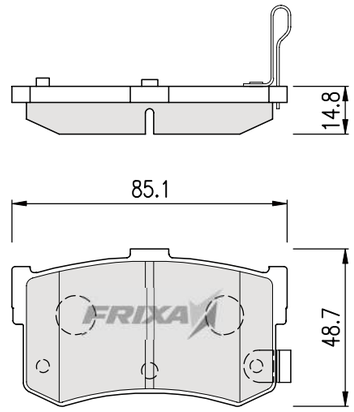

FPH02S — HYUNDAI

PART NUMBER	**58101-34A21**
REPRESENTATIVE MODEL	SONATA III
INTERCHANGEABLE	SONATA III, return spring type(93.03~98.03), MARCIA(97.10~98.05)

PO	SP	HP	FMSI	WVA	TRW
FRONT (PAD)	SP1048	HP0006	D700-7329	21725	GDB3101

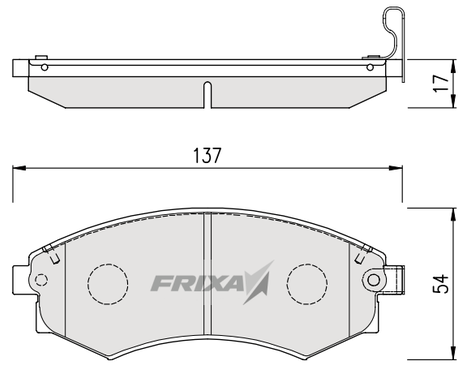

FPH02F — HYUNDAI

PART NUMBER	**58101-17A00**
REPRESENTATIVE MODEL	EF SONATA
INTERCHANGEABLE	EF SONATA(98.04~00.12), NEW EF SONATA(01.01~03.08) OPTIMA1.8/2.0(98.06~02.08)

PO	SP	HP	FMSI	WVA	TRW
FRONT (PAD)	SP1111	HP0007	D449-7329	21725	GDB3101

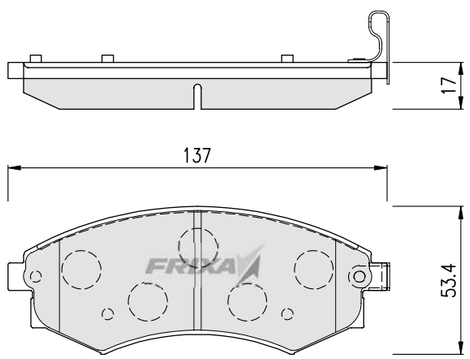

FPH02NF — HYUNDAI

PART NUMBER	**58101-1FA00**
REPRESENTATIVE MODEL	NF SONATA
INTERCHANGEABLE	NF SONATA 2.0 (04.09~07.09), NF TRANSFORM 2.0 (07.10~) NEW EF SONATA(03.09~04.08), OPTIMA REGAL(02.09~05.10)

PO	SP	HP	FMSI	WVA	TRW
FRONT (PAD)	SP1155	HP0009	D924-7825	23891	GDB3352

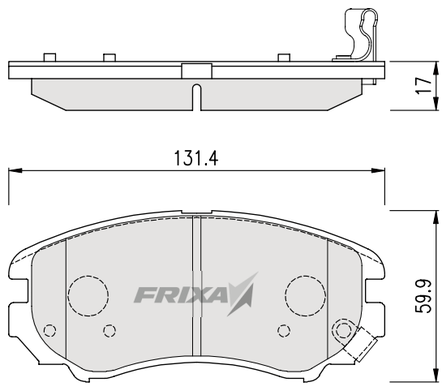

FPH04 — HYUNDAI

PART NUMBER	**58101-M2A00**
REPRESENTATIVE MODEL	NEW GRANDEUR(AZERA)2.0
INTERCHANGEABLE	NEW GRANDEUR(AZERA)2.0/2.5(95.04~98.02), CARSTA(99.05~03.03), SANTAMO(96.01~02.12)

PO	SP	HP	FMSI	WVA	TRW
FRONT (PAD)	SP1054-F	HP0010			

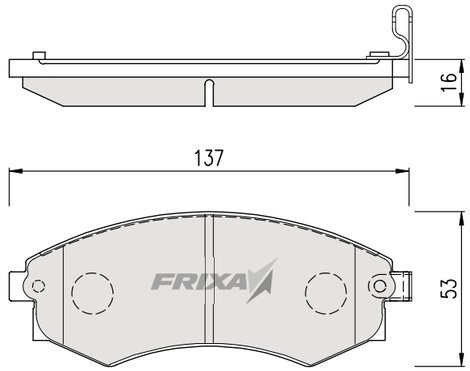

FPH04R — HYUNDAI

PART NUMBER	**58302-M2A00**
REPRESENTATIVE MODEL	NEW GRANDEUR(AZERA)2.0 R
INTERCHANGEABLE	NEW GRANDEUR(AZERA)2.0/2.5(95.04~98.02) NEW GRANDEUR(AZERA)2.5(95.04~98.01)

PO	SP	HP	FMSI	WVA	TRW
REAR (PAD)	SP1054-R	HP0011		23608	

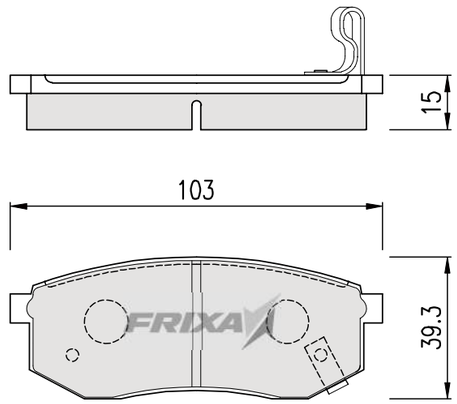

FPH05 — HYUNDAI

PART NUMBER	**58101-37A10**
REPRESENTATIVE MODEL	NEW GRANDEUR(AZERA)3.0
INTERCHANGEABLE	NEW GRANDEUR(AZERA)3.0/3.5(95.04~98.09), DYNASTY(99.10~05.08)

PO	SP	HP	FMSI	WVA	TRW
FRONT (PAD)	SP1081	HP0012			

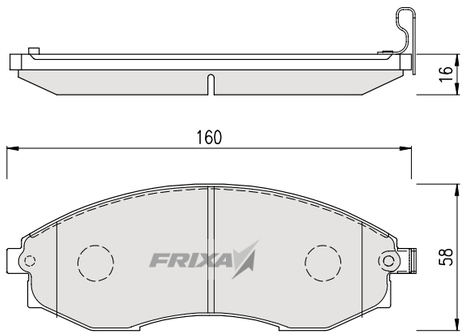

FPH05R — HYUNDAI

PART NUMBER	**58215-375A0**
REPRESENTATIVE MODEL	NEW GRANDEUR3.0 R
INTERCHANGEABLE	NEW GRANDEUR(AZERA)2.5(98.01~98.09), NEW GRANDEUR(AZERA)3.0/3.5(95.04~98.09)

PO	SP	HP	FMSI	WVA	TRW
REAR (PAD)	SP1082	HP0013			

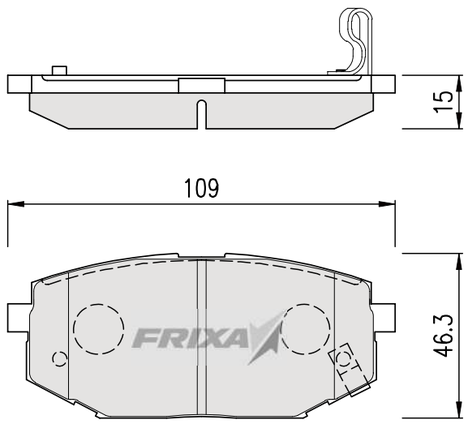

FPH06 — HYUNDAI

PART NUMBER	**58101-43A00**
REPRESENTATIVE MODEL	PORTER
INTERCHANGEABLE	NEW GRACE(H100)(94.05~03.12), PORTER(NEW)(96.03~03.12)

PO	SP	HP	FMSI	WVA	TRW
FRONT (PAD)	SP1072	HP0019	D1137-8247	23081	GDB3089

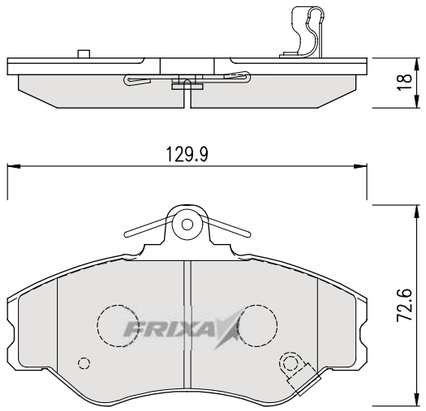

FPH07 — HYUNDAI

PART NUMBER	**SB000027**
REPRESENTATIVE MODEL	GALLOPER
INTERCHANGEABLE	GALLOPER,GALLOPER INNOVATION (91.09~03.12)

PO	SP	HP	FMSI	WVA	TRW
FRONT (PAD)	SP1053	HP0017		23518	

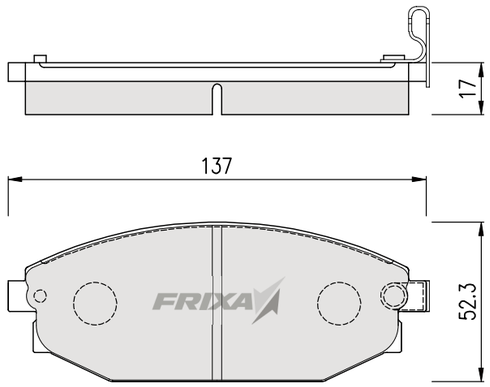

FPH08 — HYUNDAI

PART NUMBER	**58101-45A00**
REPRESENTATIVE MODEL	MIGHTY
INTERCHANGEABLE	MIGHTY2.5TON(~04.09) MIGHTY3.5TON(~04.09)

PO	SP	HP	FMSI	WVA	TRW
FRONT (PAD)	SP1080	HP0028	D716-8941		

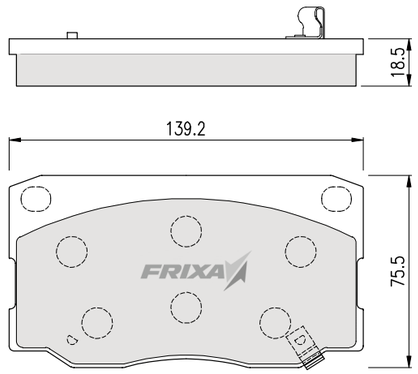

FPH09 — HYUNDAI

PART NUMBER	**58101-4AA00**
REPRESENTATIVE MODEL	STAREX(H1)
INTERCHANGEABLE	STAREX(H1)(97.03~02.09) LIBERO(97.03~03.11)

PO	SP	HP	FMSI	WVA	TRW
FRONT (PAD)	SP1099	HP0018		23536	GDB3201

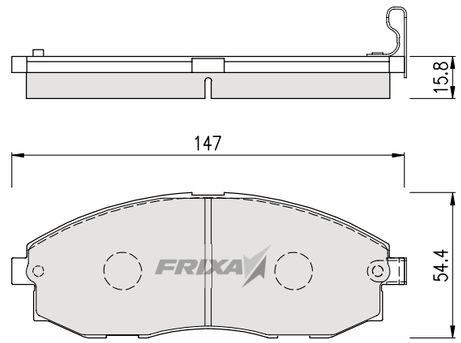

FPH09N — HYUNDAI

PART NUMBER	**58101-2AA26**
REPRESENTATIVE MODEL	STAREX(H1)(NEW)
INTERCHANGEABLE	STAREX(H1)(NEW)(02.10~07.05) LIBERO(03.12~07.12)

PO	SP	HP	FMSI	WVA	TRW
FRONT (PAD)	SP1157	HP0024	D903-7781	23569	GDB3244

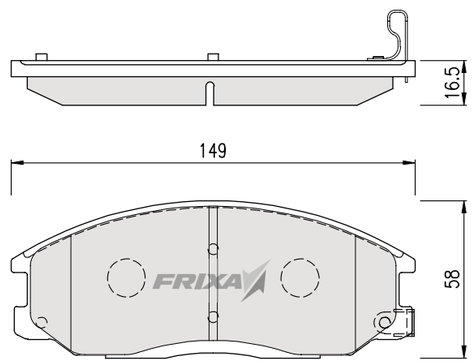

FPH09R — HYUNDAI

PART NUMBER	**58302-2BA00**
REPRESENTATIVE MODEL	STAREX(H1) R
INTERCHANGEABLE	STAREX(H1)(NEW)(04.01~07.04) NEW SANTAFE(06MY)(05.11~09.10)

PO	SP	HP	FMSI	WVA	TRW
REAR (PAD)	SP1178		D1297-8414	24464	

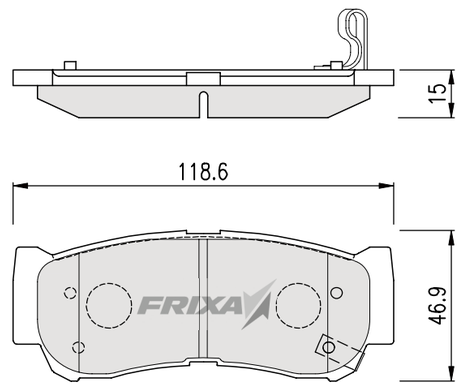

FPH10 — HYUNDAI

PART NUMBER	**58101-02A00**
REPRESENTATIVE MODEL	ATOZ(SANTRO)
INTERCHANGEABLE	ATOZ(SANTRO)(97.09~00.11) VISTO(98.02~00.11)

PO	SP	HP	FMSI	WVA	TRW
FRONT (PAD)	SP1096	HP0001	D1148-8225	23238	GDB3165

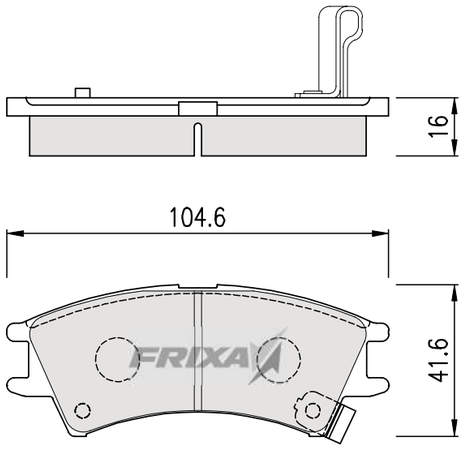

FPH10N — HYUNDAI

PART NUMBER	**58101-02A10**
REPRESENTATIVE MODEL	ATOZ(SANTRO)(NEW)
INTERCHANGEABLE	ATOZ(SANTRO)(NEW)(00.12~02.12) VISTO(NEW)(00.12~04.01)

PO	SP	HP	FMSI	WVA	TRW
FRONT (PAD)	SP1149	HP0002	D1142-8253	24277	GDB3377

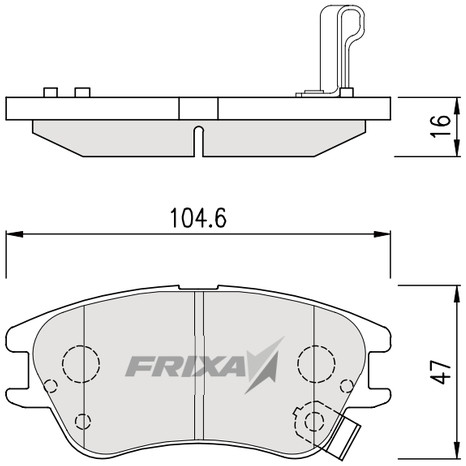

FPH11 — HYUNDAI

PART NUMBER	**4K52Y-3323Z**
REPRESENTATIVE MODEL	SANTAFE
INTERCHANGEABLE	SANTAFE 2WD(00.02~05.11) TRAJET XG(15")(99.09~07.05)

PO	SP	HP	FMSI	WVA	TRW
FRONT (PAD)	SP1115	HP0014	D864-7792	23569	GDB3244

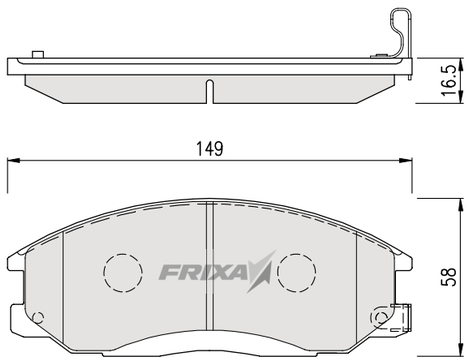

FPH11N — HYUNDAI

PART NUMBER	**0K52Y-3323Z**
REPRESENTATIVE MODEL	SANTAFE 4WD
INTERCHANGEABLE	SANTAFE 4WD(00.02~05.11) NEW GRANDEUR(AZERA) XG3.0(12")(02.07~05.05)

PO	SP	HP	FMSI	WVA	TRW
FRONT (PAD)	SP1190		D864-7739		

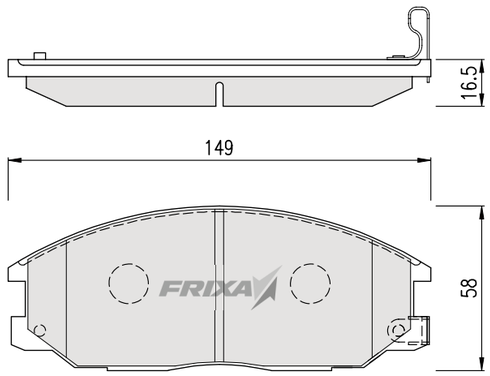

FPH12 — HYUNDAI

PART NUMBER	**58101-H1A00**
REPRESENTATIVE MODEL	TERRACAN
INTERCHANGEABLE	TERRACAN(01.01~04.07)

PO	SP	HP	FMSI	WVA	TRW
FRONT (PAD)	SP1097	HP0022		24059	GDB3299

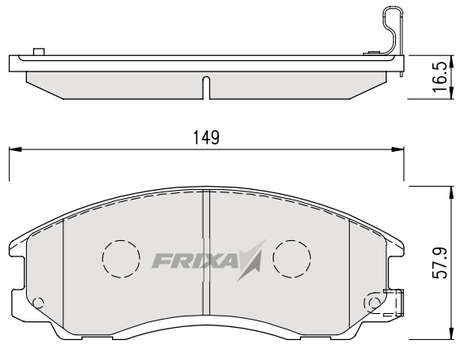

FPH12R — HYUNDAI

PART NUMBER	**58302-H1A00**
REPRESENTATIVE MODEL	TERRACAN R
INTERCHANGEABLE	TERRACAN(01.01~04.07) NEW TERRACAN(04.08~06.10)

PO	SP	HP	FMSI	WVA	TRW
REAR (PAD)	SP1098	HP0023		23813	GDB3296

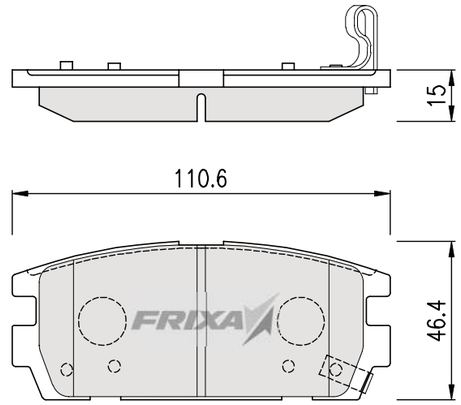

FPH14 — HYUNDAI

PART NUMBER	**58101-1FA50**
REPRESENTATIVE MODEL	TUCSON
INTERCHANGEABLE	TUCSON(04.03~09.07) NEW SPORTAGE(04.08~10.02)

PO	SP	HP	FMSI	WVA	TRW
FRONT (PAD)	SP1155		8306-D1125	23891	GDB3352

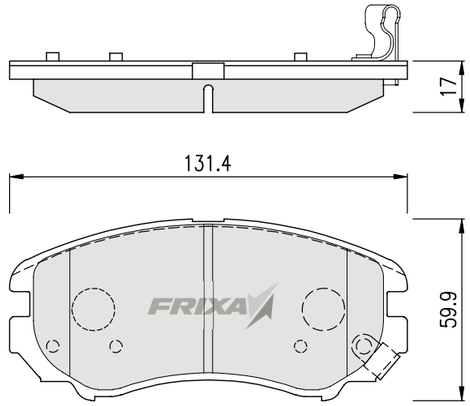

FPH15 — HYUNDAI

PART NUMBER	**58101-4FA00**
REPRESENTATIVE MODEL	PORTER II
INTERCHANGEABLE	PORTER II(04.11~)

PO	SP	HP	FMSI	WVA	TRW
FRONT (PAD)	SP1174	HP0029			

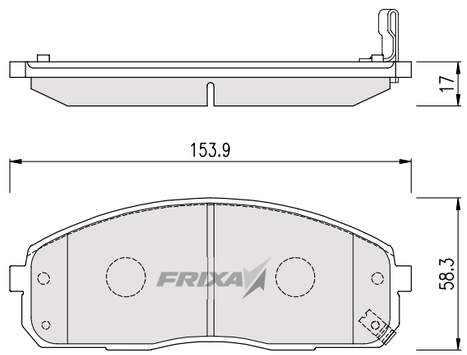

FPH16 — HYUNDAI

PART NUMBER	**58101-3BA20**
REPRESENTATIVE MODEL	EQUUS(CONTINENTAL)(NEW)4.5
INTERCHANGEABLE	EQUUS(CONTINENTAL)3.0/3.5/4.5(17")(04.06~09.02) EQUUS(CONTINENTAL) 09MY(09.03~11.09)

PO	SP	HP	FMSI	WVA	TRW
FRONT (PAD)	SP1206				

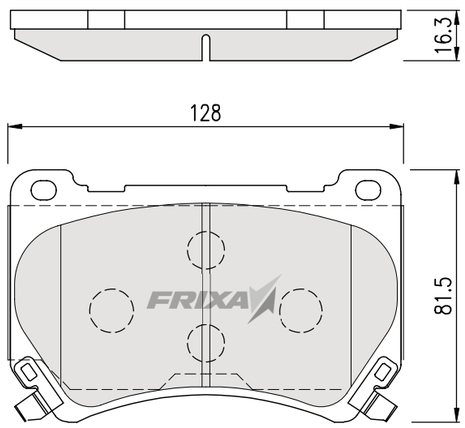

FPH17 — HYUNDAI

PART NUMBER	**58101-3KA20**
REPRESENTATIVE MODEL	NF SONATA 16"
INTERCHANGEABLE	NF SONATA 2.4 (04.09~07.09) NF TRANSFORM 2.4 (07.10~)

PO	SP	HP	FMSI	WVA	TRW
FRONT (PAD)	SP1182	HP0031	D1125-8233	23891	GDB3352

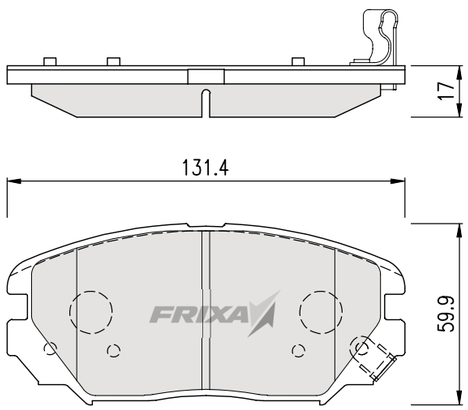

FPH19R — HYUNDAI

PART NUMBER	**58302-3JA00**
REPRESENTATIVE MODEL	VERACRUZ R
INTERCHANGEABLE	VERACRUZ(06.05~), GRAND STREX(07.05~) GRAND CARNIVAL(SEDONA)(05.07~)

PO	SP	HP	FMSI	WVA	TRW
REAR (PAD)	SP1192		D1302-8418	24599	GDB3449

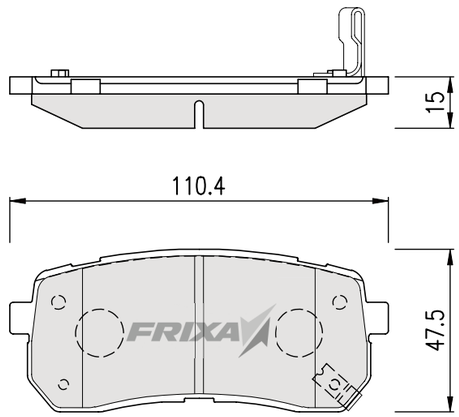

FPH20 — HYUNDAI

PART NUMBER	**58101-1MA00**
REPRESENTATIVE MODEL	I-30
INTERCHANGEABLE	I-30(07.06~), ALL NEW SOUL(13.10~) FORTE(08.08~), CEE-D 07"

PO	SP	HP	FMSI	WVA	TRW
FRONT (PAD)	SP1240			23966	GDB3342

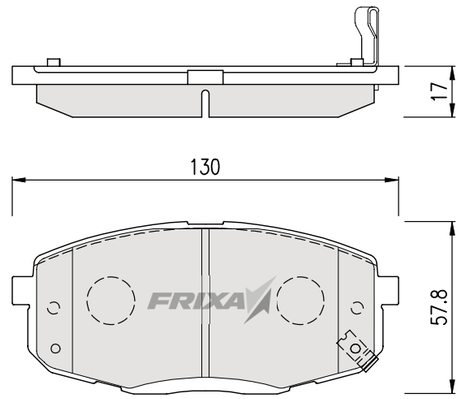

FPH17R — HYUNDAI

PART NUMBER	**58302-2EA31**
REPRESENTATIVE MODEL	NF TRANSFORM R
INTERCHANGEABLE	NF TRANSFORM(07.12~), OPIRUS(AMANTI)(NEW)(06.06~12.02) SOUL(08.09~13.09), LOTZE INNOVATION(16")(05.11~10.04)

PO	SP	HP	FMSI	WVA	TRW
REAR (PAD)	SP1239		D1313-8428	24934	

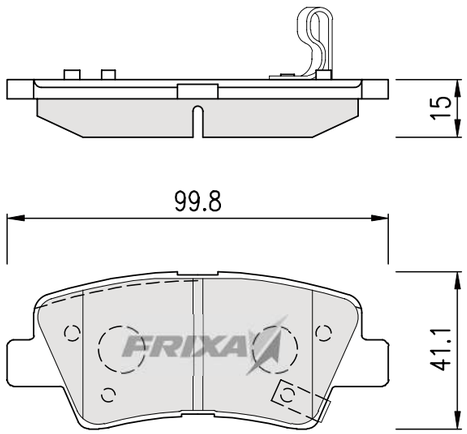

FPH19 — HYUNDAI

PART NUMBER	**58101-3JA00**
REPRESENTATIVE MODEL	VERACRUZ
INTERCHANGEABLE	VERACRUZ(06.05~)

PO	SP	HP	FMSI	WVA	TRW
FRONT (PAD)	SP1203		D1301-8417		

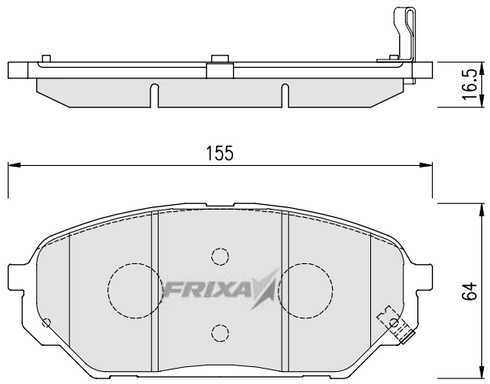

FPH21 — HYUNDAI

PART NUMBER	**58101-2HA10**
REPRESENTATIVE MODEL	AVANTE(ELANTRA) 06MY
INTERCHANGEABLE	AVANTE(ELANTRA) 06MY(06.06~10.07)

PO	SP	HP	FMSI	WVA	TRW
FRONT (PAD)	SP1202		8306-D1125	23891	GDB3352

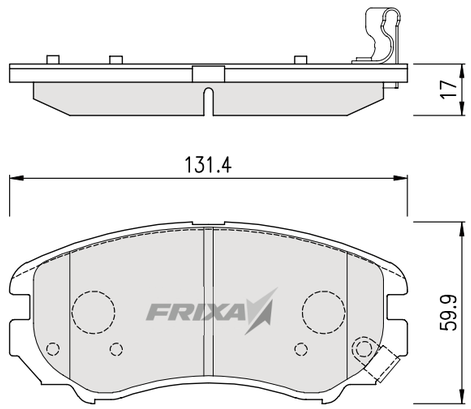

FPH22 — HYUNDAI

PART NUMBER	**58160-5K300**
REPRESENTATIVE MODEL	MIGHTY 06MY
INTERCHANGEABLE	MIGHTY 06MY(06.04~), COUNTY 06MY(06.04~)

PO	SP	HP	FMSI	WVA	TRW
FRONT (PAD)	SP1207		D1062-7968		GDB1695

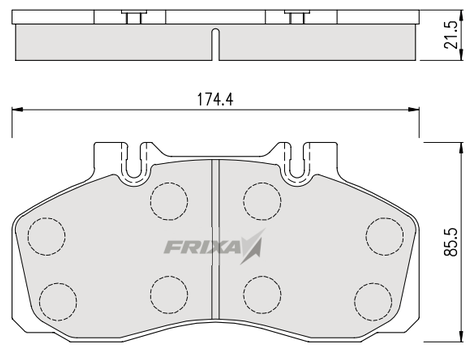

FPH23 — HYUNDAI

PART NUMBER	**58101-3MA00**
REPRESENTATIVE MODEL	GENESIS
INTERCHANGEABLE	GENESIS(08.01~12.11)

PO	SP	HP	FMSI	WVA	TRW
FRONT (PAD)	SP1246		D1384-8400		

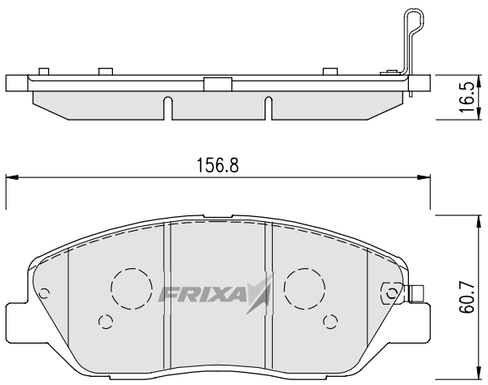

FPH23R(FPK26R) — KIA

PART NUMBER	**58302-2JA00**
REPRESENTATIVE MODEL	GENESIS R
INTERCHANGEABLE	MOHAVE(BOREGO)(08.01~), GENESIS, 13MY(08.01~) CHAIRMAN W(08.04~), GENESIS COUPE17"(08.10~)

PO	SP	HP	FMSI	WVA	TRW
REAR (PAD)	SP1247		D1387-8496	25153	

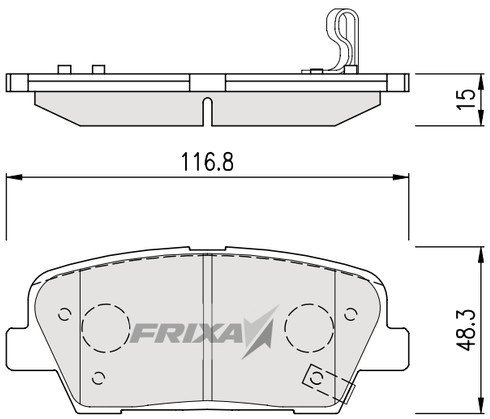

FPH24 — HYUNDAI

PART NUMBER	**58101-2MA10**
REPRESENTATIVE MODEL	GENESIS COUPE 3.8
INTERCHANGEABLE	COUPE 3.8 18"19"(BREMBO TYPE)(08.10~)

PO	SP	HP	FMSI	WVA	TRW
FRONT (PAD)	SP2119		D1001-7942	23092	

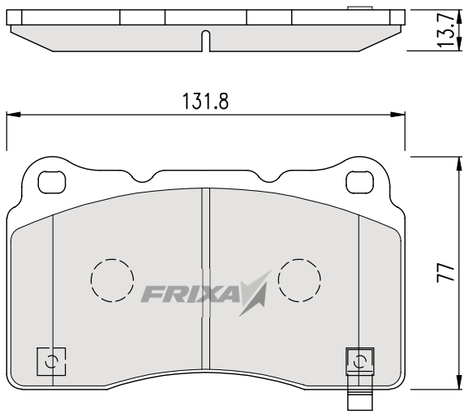

FPH24R — HYUNDAI

PART NUMBER	**58302-2MA10**
REPRESENTATIVE MODEL	GENESIS COUPE 3.8 R
INTERCHANGEABLE	COUPE 3.8 18"19"(BREMBO TYPE)(08.10~)

PO	SP	HP	FMSI	WVA	TRW
REAR (PAD)	SP1494	HP1494	D960-7858	23142	

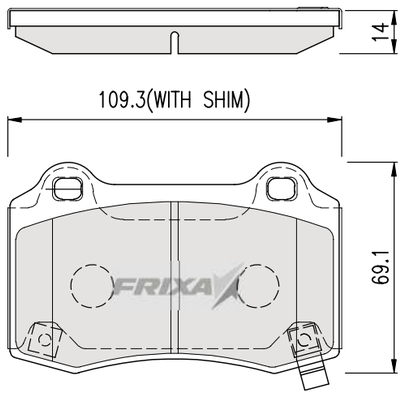

FPH25 — HYUNDAI

PART NUMBER	**58101-2SA00**
REPRESENTATIVE MODEL	YF SONATA
INTERCHANGEABLE	YF SONATA 2.0(09.09~), LF SONATA 15"(14.03~), SPORTAGE R 2WD(10.03~11.01), TUCSON IX 2WD(09.08~11.12)

PO	SP	HP	FMSI	WVA	TRW
FRONT (PAD)	SP1374		D1447-8615	25187	

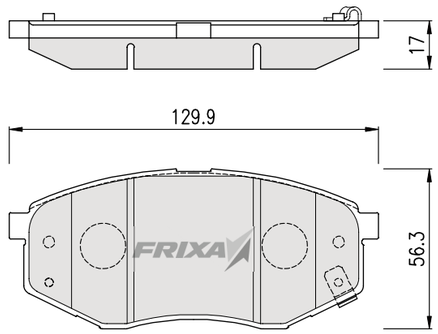

FPH25R — HYUNDAI

PART NUMBER	**58302-0ZA00**
REPRESENTATIVE MODEL	YF SONATA R
INTERCHANGEABLE	YF SONATA(09.09~), LF SONATA(14.03~), K7(CADENZA)(10.05~), VERNA 05MY(05.08~10.12)

PO	SP	HP	FMSI	WVA	TRW
REAR (PAD)	SP1187		D1157-8267	24320	GDB3421

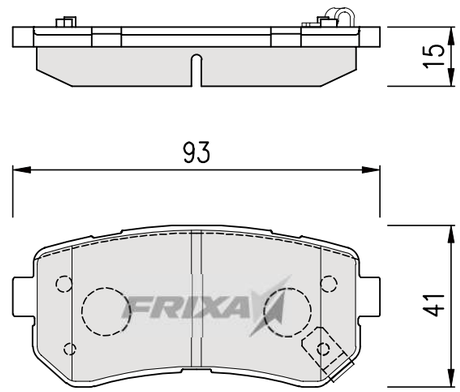

FPH26 — HYUNDAI

PART NUMBER	**58101-2VA00**
REPRESENTATIVE MODEL	AVANTE(ELANTRA) MD
INTERCHANGEABLE	AVANTE(ELANTRA) MD(10.08~), VELOSTER (11.03~), K3(CERATO)(12.10~), I-30 12MY(12.01~)

PO	SP	HP	FMSI	WVA	TRW
FRONT (PAD)	SP1400		D1543-8751		

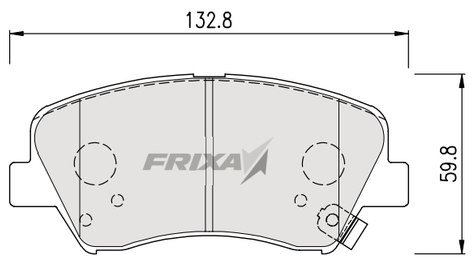

FPH26R — HYUNDAI

PART NUMBER	**58302-1RA30**
REPRESENTATIVE MODEL	AVANTE(ELANTRA) MD R
INTERCHANGEABLE	AVANTE(ELANTRA) MD(10.07~), ACCENT(SOLARIS) 11MY(11.01~)

PO	SP	HP	FMSI	WVA	TRW
REAR (PAD)	SP1401		D1544-8428	24934	

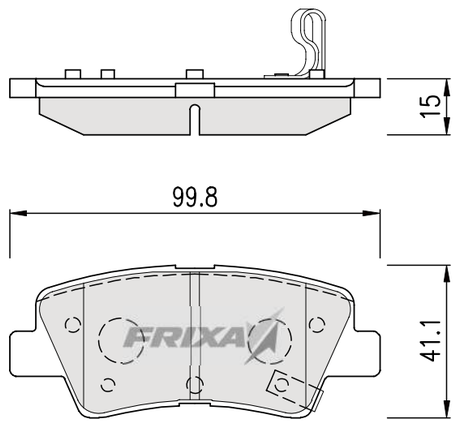

FPH27 — HYUNDAI

PART NUMBER	**58101-1RA00**
REPRESENTATIVE MODEL	ACCENT(SOLARIS) 11MY
INTERCHANGEABLE	ACCENT(SOLARIS) 11MY(11.01~), PRIDE 12MY(12.01~)

PO	SP	HP	FMSI	WVA	TRW
FRONT (PAD)	SP1399		D1593-8806	25348	

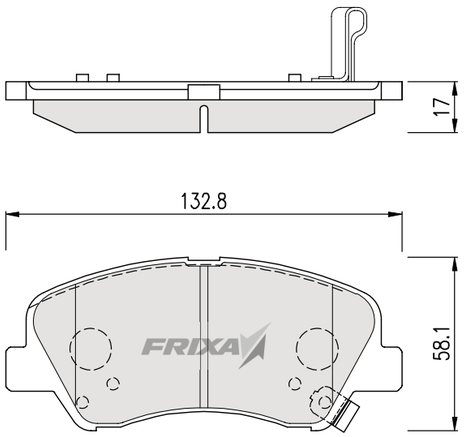

FPH28 — HYUNDAI

PART NUMBER	**58101-2MA00**
REPRESENTATIVE MODEL	GRANDEUR(AZERA) HG
INTERCHANGEABLE	GRANDEUR(AZERA) HG 3.0 17"(11.02~11.12), GRANDEUR HG 3.0 18"(11.02~)

PO	SP	HP	FMSI	WVA	TRW
FRONT (PAD)	SP1403		D1413-8527	24915	

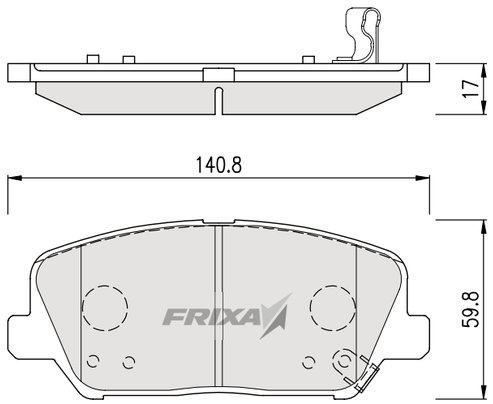

FPH30(FPK21) — HYUNDAI

PART NUMBER	**58101-4DA00**
REPRESENTATIVE MODEL	GRAND STAREX(H1)
INTERCHANGEABLE	NEW CARNIVAL(SEDONA)(16")(06.02~), GRAND STAREX(H1)(07.05~)

PO	SP	HP	FMSI	WVA	TRW
FRONT (PAD)	SP1238		D1566-8775	24598	GDB3448

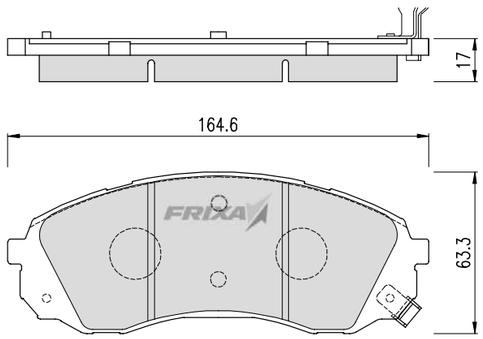

FPH31R — HYUNDAI

PART NUMBER	**58302-2VA30**
REPRESENTATIVE MODEL	VELOSTER
INTERCHANGEABLE	VELOSTER(11.02~), K7 EPB TYPE(10.05~), YF SONATA EPB(09.09~), LF SONATA EPB(14.03~)

PO	SP	HP	FMSI	WVA	TRW
REAR (PAD)	SP1407		D1594-8428	25337	

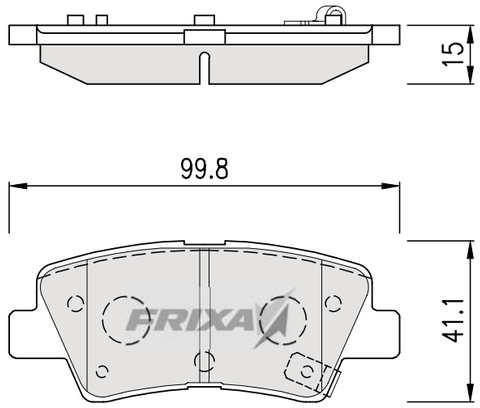

FPH28NR — HYUNDAI

PART NUMBER	**58302-3VA50**
REPRESENTATIVE MODEL	GRANDEUR(AZERA) HG 3.3 EPB TYPE R
INTERCHANGEABLE	GRANDEUR(AZERA) HG 3.3 EPB TYPE(11.02~) ASLAN 15MY

PO	SP	HP	FMSI	WVA	TRW
REAR (PAD)	SP1499				

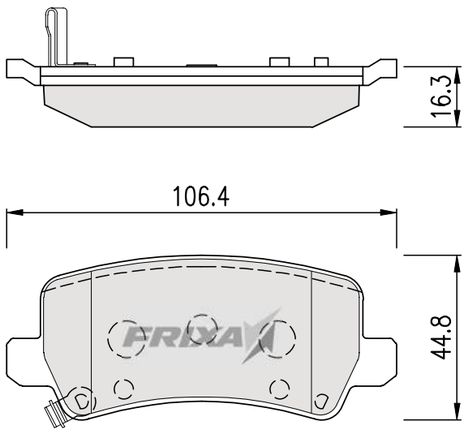

FPH29 — HYUNDAI

PART NUMBER	**58101-3NA50**
REPRESENTATIVE MODEL	EQUUS(CONTINENTAL) 11MY
INTERCHANGEABLE	EQUUS(CONTINENTAL) (18") 12MY(11.12~), GENESIS 13MY(12.12~), K9 3.8(12.04~)

PO	SP	HP	FMSI	WVA	TRW
FRONT (PAD)	SP1547		D1799-9030		

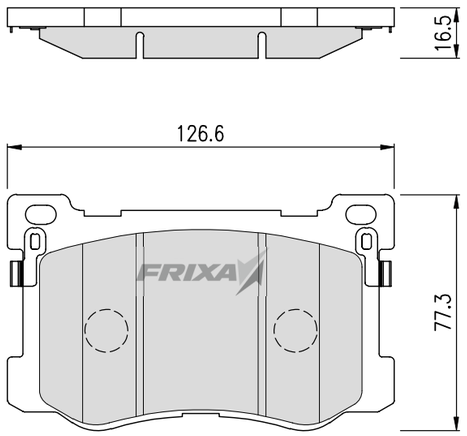

FPH31NR — HYUNDAI

PART NUMBER	**58302-A5A20**
REPRESENTATIVE MODEL	VELOSTER EPB TYPE R
INTERCHANGEABLE	VELOSTER EPB TYPE(11.02~), I-30 12MY EPB TYPE(12.01~) LF SONATA EPR TYPE(14.03~)

PO	SP	HP	FMSI	WVA	TRW
REAR (PAD)	SP1851		D1813-8428		

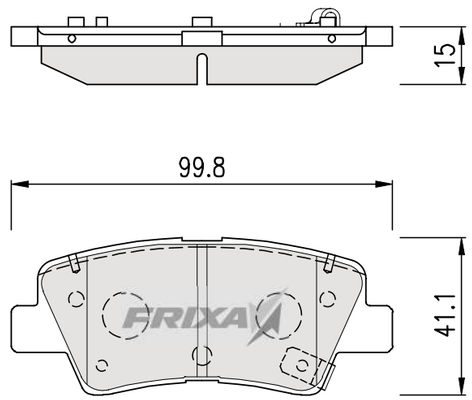

FPH32 — HYUNDAI

PART NUMBER	**58101-5LA00**
REPRESENTATIVE MODEL	MIGHTY 11MY F
INTERCHANGEABLE	MIGHTY 11MY (11.07~)

PO	SP	HP	FMSI	WVA	TRW
FRONT (PAD)	SP1552				

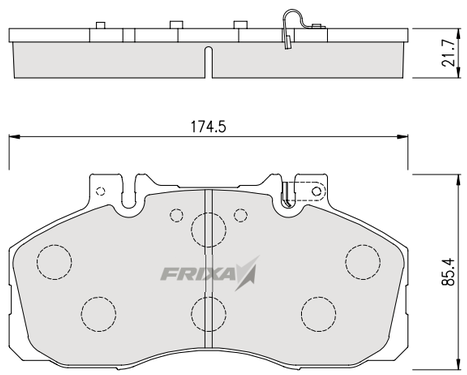

FPH33 — HYUNDAI

PART NUMBER	**58101-C1A00**
REPRESENTATIVE MODEL	LF 15 F
INTERCHANGEABLE	LF SONATA (14.03~)

PO	SP	HP	FMSI	WVA	TRW
FRONT (PAD)	SP1681				

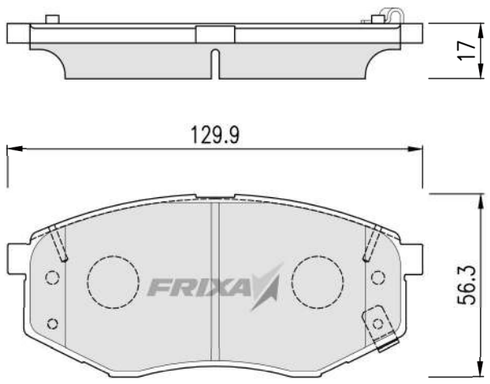

FPH33R — HYUNDAI

PART NUMBER	**58302-D4A00**
REPRESENTATIVE MODEL	LF R
INTERCHANGEABLE	LF SONATA (14.03~)

PO	SP	HP	FMSI	WVA	TRW
REAR (PAD)	SP1850				

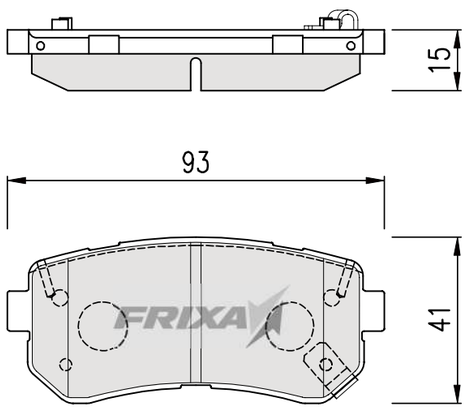

FPH34 — HYUNDAI

PART NUMBER	**58101-C1A10**
REPRESENTATIVE MODEL	LF 16 F (LF 17" F)
INTERCHANGEABLE	LF SONATA 16" (14.03~), LF SONATA HYBRID 16" (14.03~). I30 16" (16.09~)

PO	SP	HP	FMSI	WVA	TRW
FRONT (PAD)	SP1682				

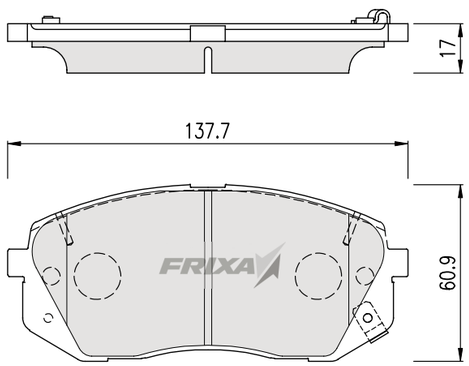

FPH35 — HYUNDAI

PART NUMBER	**58101-D3A00**
REPRESENTATIVE MODEL	ALL NEW TUCSON
INTERCHANGEABLE	IONIQ, NIRO, SPORTAGE 16MY(15.09 ~), AVANTE AD SPORT(16.04 ~)

PO	SP	HP	FMSI	WVA	TRW
FRONT (PAD)	SP1844				

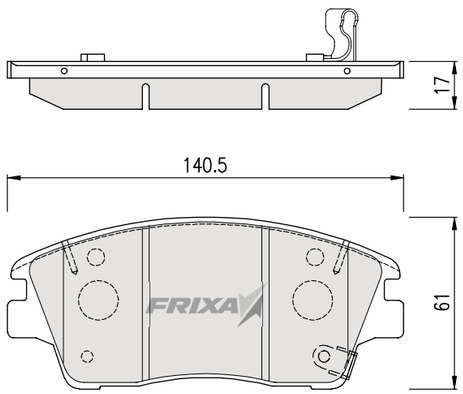

FPH35R — HYUNDAI

PART NUMBER	**58302-D3A00**
REPRESENTATIVE MODEL	ALL NEW TUCSON (HAND TYPE)
INTERCHANGEABLE	SPORTAGE 16MY(15.09 ~)

PO	SP	HP	FMSI	WVA	TRW
REAR (PAD)	SP1845		D1848-8428		

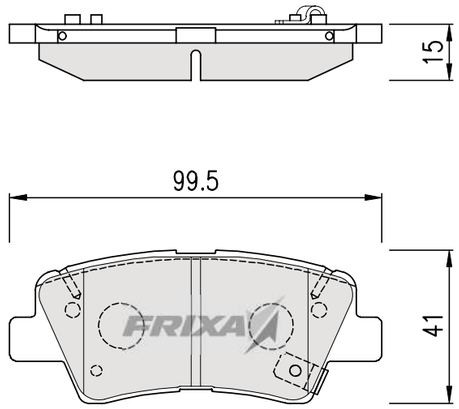

FPH35NR — HYUNDAI

PART NUMBER	**58302-D3A70**
REPRESENTATIVE MODEL	ALL NEW TUCSON (EPB TYPE)
INTERCHANGEABLE	IONIQ, NIRO, SPORTAGE 16MY EPB(15.09 ~), AVANTE AD(15.09 ~)

PO	SP	HP	FMSI	WVA	TRW
REAR (PAD)	SP1846				

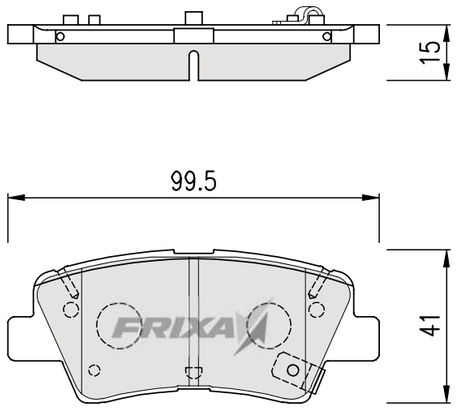

FPH36 — HYUNDAI

PART NUMBER	**58101 D2A00**
REPRESENTATIVE MODEL	GENESIS EQ900(HI)
INTERCHANGEABLE	

PO	SP	HP	FMSI	WVA	TRW
FRONT (PAD)	SP1955				

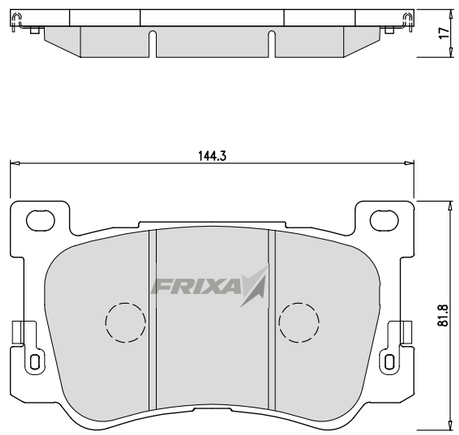

FPH36R — HYUNDAI

PART NUMBER	**58302 D2A00**
REPRESENTATIVE MODEL	GENESIS EQ900(HI)
INTERCHANGEABLE	

PO	SP	HP	FMSI	WVA	TRW
REAR (PAD)	SP1978				

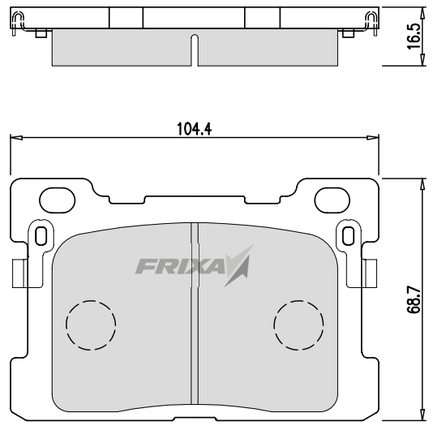

FPH37 — HYUNDAI

PART NUMBER	**58101 F2A00**
REPRESENTATIVE MODEL	AVANTE AD
INTERCHANGEABLE	IONIQ, NIRO

PO	SP	HP	FMSI	WVA	TRW
FRONT (PAD)	SP1905				

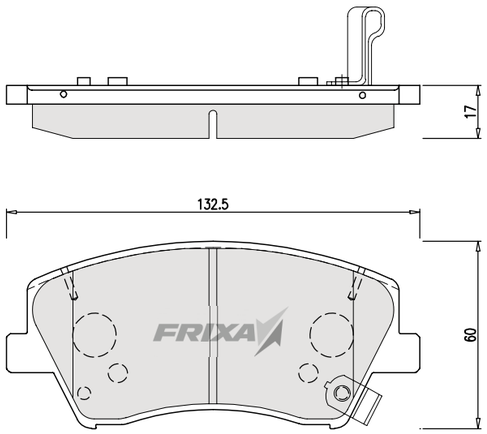

FPH38 — HYUNDAI

PART NUMBER	**58101 59A00**
REPRESENTATIVE MODEL	SOLATI
INTERCHANGEABLE	MOHAVE(BOREGO)(08.01~), GENESIS, 13MY(08.01~) CHAIRMAN W(08.04~), GENESIS COUPE17"(08.10~)

PO	SP	HP	FMSI	WVA	TRW
FRONT (PAD)	SP4037				

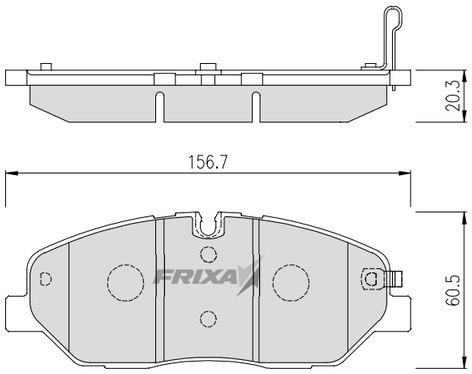

FPH38R — HYUNDAI

PART NUMBER	**58301 59A00**
REPRESENTATIVE MODEL	SOLATI
INTERCHANGEABLE	

PO	SP	HP	FMSI	WVA	TRW
REAR (PAD)	SP4038				

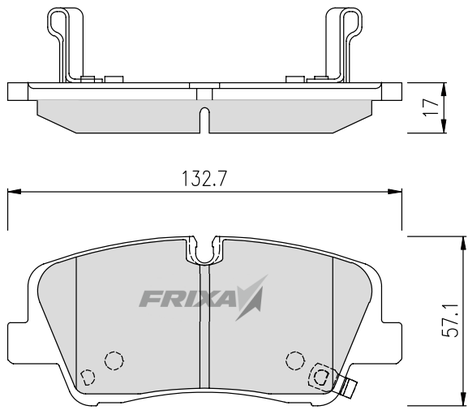

FPH39 — HYUNDAI

PART NUMBER	**58101 4HA15**
REPRESENTATIVE MODEL	GRAND STAREX 17MY
INTERCHANGEABLE	

PO	SP	HP	FMSI	WVA	TRW
FRONT (PAD)	SP1890				

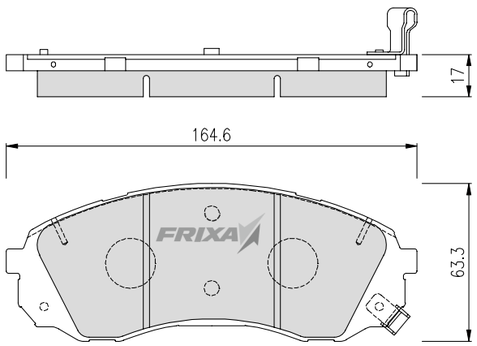

FPH40 — HYUNDAI

PART NUMBER	**58101 G8A30**
REPRESENTATIVE MODEL	GRANDEUR IG 18"
INTERCHANGEABLE	

PO	SP	HP	FMSI	WVA	TRW
FRONT (PAD)					

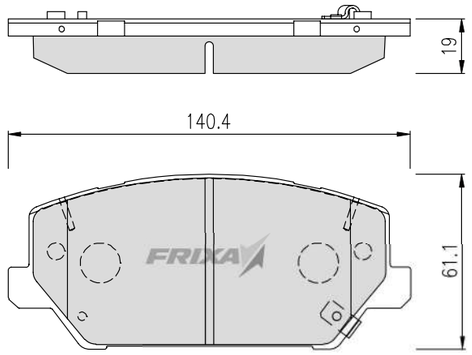

FPH41 — HYUNDAI

PART NUMBER	**58101 4FA40**
REPRESENTATIVE MODEL	PORTER II 14MY
INTERCHANGEABLE	BONGO III TRUCK 14MY

PO	SP	HP	FMSI	WVA	TRW
FRONT (PAD)	SP1735	HP0063			

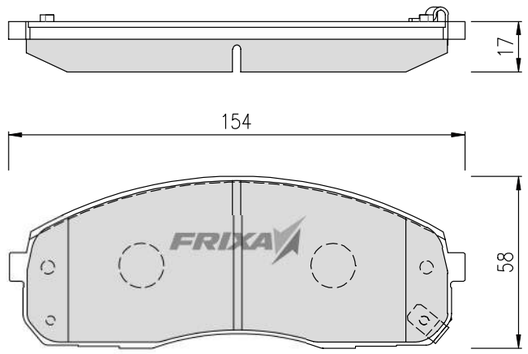

FPH42 — HYUNDAI

PART NUMBER	**58101 4FA20**
REPRESENTATIVE MODEL	PORTER II 17MY
INTERCHANGEABLE	BONGO III TRUCK 17MY

PO	SP	HP	FMSI	WVA	TRW
FRONT (PAD)	SP1174A				

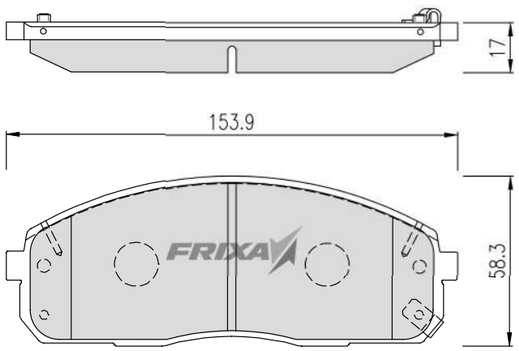

FPH43 — HYUNDAI

PART NUMBER	**58101 2WA40**
REPRESENTATIVE MODEL	SANTAFE THE PRIME
INTERCHANGEABLE	

PO	SP	HP	FMSI	WVA	TRW
FRONT (PAD)	SP4102				

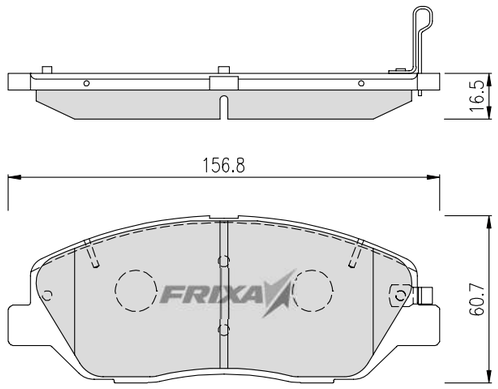

FPH44 — HYUNDAI

PART NUMBER	**58101 J9A00**
REPRESENTATIVE MODEL	I-30 18MY
INTERCHANGEABLE	KONA (15") (17.07~) ALL NEW SOUL 18MY

PO	SP	HP	FMSI	WVA	TRW
FRONT (PAD)	SP4098				

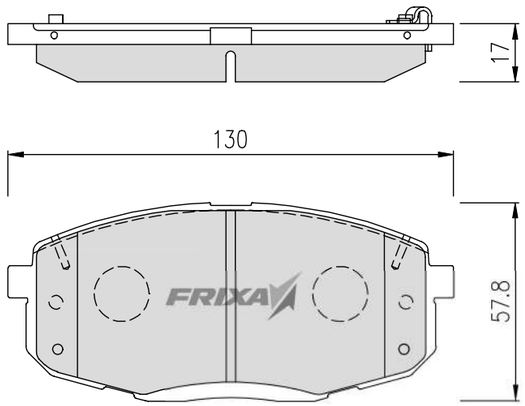

FPH45 — HYUNDAI

PART NUMBER	**58101 B1A01**
REPRESENTATIVE MODEL	GENESIS G80 2WD 18", 19"
INTERCHANGEABLE	

PO	SP	HP	FMSI	WVA	TRW
FRONT (PAD)	SP4227				

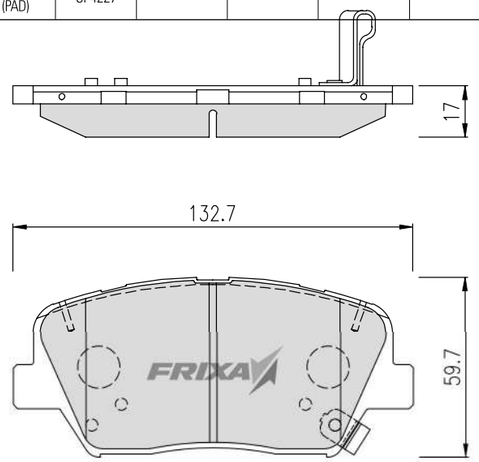

FPH47 — HYUNDAI

PART NUMBER	**58101 J5A00**
REPRESENTATIVE MODEL	GENESIS G70 17"
INTERCHANGEABLE	STINGER 17"

PO	SP	HP	FMSI	WVA	TRW
FRONT (PAD)	SP1882			HP0020	

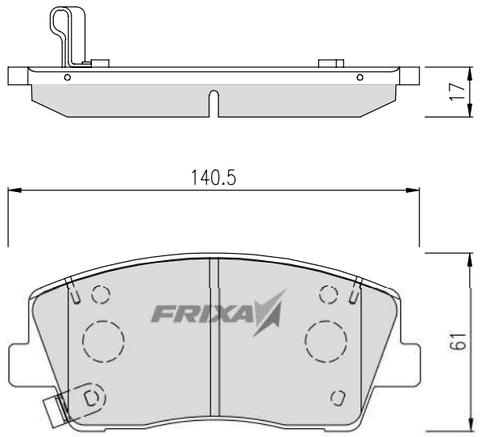

FPH47R — HYUNDAI

PART NUMBER	**58302 J5A00**
REPRESENTATIVE MODEL	GENESIS G70 R
INTERCHANGEABLE	STINGER R

PO	SP	HP	FMSI	WVA	TRW
REAR (PAD)	SP1883				

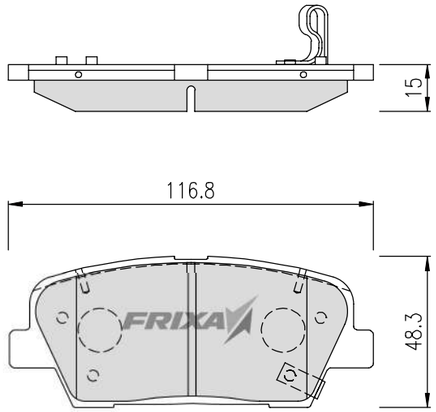

FPH45R — HYUNDAI

PART NUMBER	**58302 B1A30**
REPRESENTATIVE MODEL	GENESIS G80 R
INTERCHANGEABLE	

PO	SP	HP	FMSI	WVA	TRW
REAR (PAD)	SP1546A				

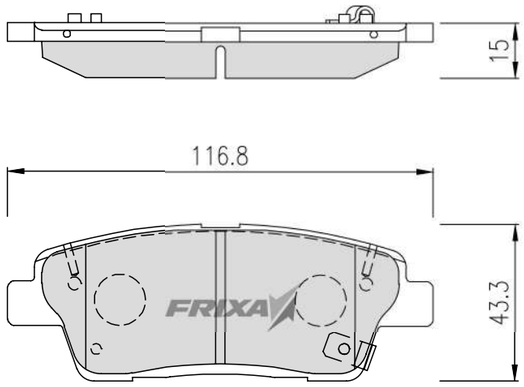

FPH46 — HYUNDAI

PART NUMBER	**58101 B1A11**
REPRESENTATIVE MODEL	GENESIS G80 4WD 18", 19"
INTERCHANGEABLE	

PO	SP	HP	FMSI	WVA	TRW
FRONT (PAD)	SP4228				

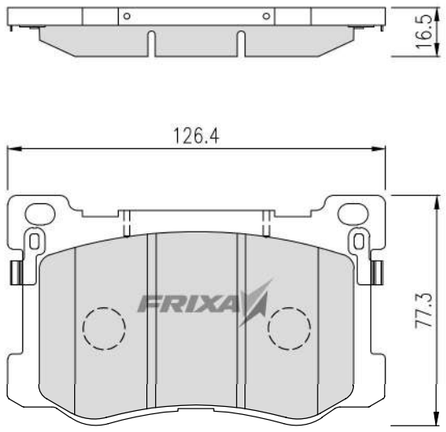

FPH48 — HYUNDAI

PART NUMBER	**58101 G9A20**
REPRESENTATIVE MODEL	GENESIS G70 18"
INTERCHANGEABLE	STINGER 18"

PO	SP	HP	FMSI	WVA	TRW
FRONT (PAD)	SP1875				

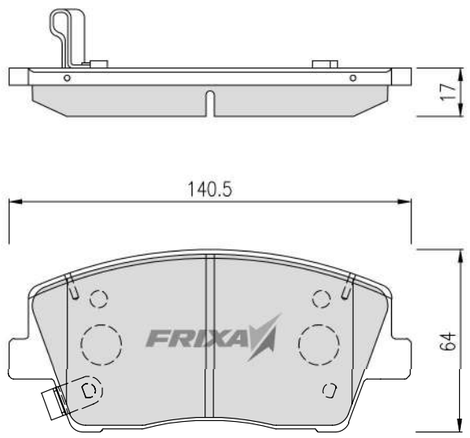

FPHXDF — HYUNDAI

PART NUMBER	**58101-2D000**
REPRESENTATIVE MODEL	AVANTE(ELANTRA) XD
INTERCHANGEABLE	AVANTE(ELANTRA) XD1.5(00.03~04.04)

PO	SP	HP	FMSI	WVA	TRW
FRONT (PAD)	SP1147	HP0020			

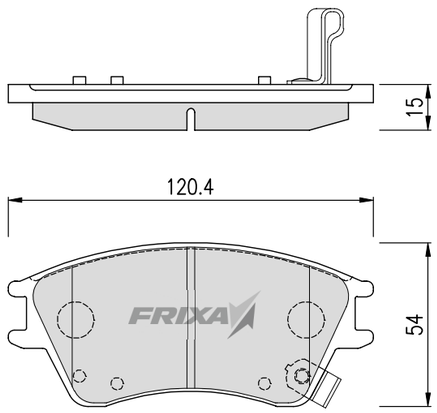

FPHXGF — HYUNDAI

PART NUMBER	**58115-391S0**
REPRESENTATIVE MODEL	GRANDEUR(AZERA) XG
INTERCHANGEABLE	GRANDEUR(AZERA) XG2.5/3.0(15")(98.09~02.06). GRANDEUR(AZERA) XG2.7 TAXI(15")(98.09~02.06)

PO	SP	HP	FMSI	WVA	TRW
FRONT (PAD)	SP1115	HP0015	D864-7792		

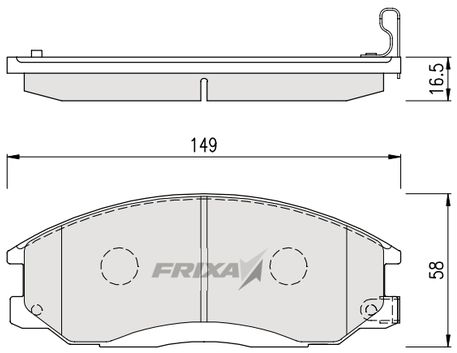

FPHXGN — HYUNDAI

PART NUMBER	**48130-21A00**
REPRESENTATIVE MODEL	NEW GRANDEUR(AZERA) XG
INTERCHANGEABLE	GRANDEUR(AZERA) XG2.5/3.0(16")(02.07~05.05), EQUUS(CONTINENTAL)3.0/3.5(16")(01.07~03.09)

PO	SP	HP	FMSI	WVA	TRW
FRONT (PAD)	SP1161	HP0016	D1013-7917	23726	GDB3257

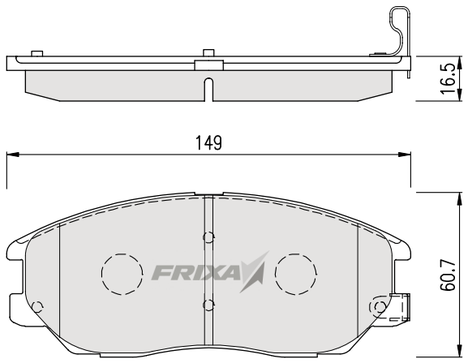

FPK01N — KIA

PART NUMBER	**58101-1GA00**
REPRESENTATIVE MODEL	PRIDE(NEW)
INTERCHANGEABLE	PRIDE 05MY(NEW RIO) (05.08~11.10), VERNA(ACCENT) 05MY(05.08~10.12)

PO	SP	HP	FMSI	WVA	TRW
FRONT (PAD)	SP1186		D1156-8266	24317	GDB3420

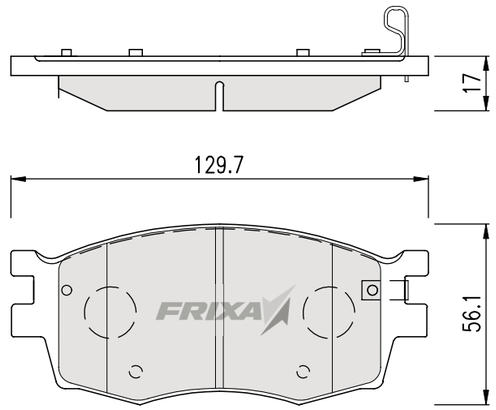

FPK01NR — KIA

PART NUMBER	**58302-1GA00**
REPRESENTATIVE MODEL	PRIDE 05MY R
INTERCHANGEABLE	VERNA 05MY(05.08~10.12), PRIDE 05MY(05.08~11.10)

PO	SP	HP	FMSI	WVA	TRW
REAR (PAD)	SP1187		D1157-8267	24320	GDB3421

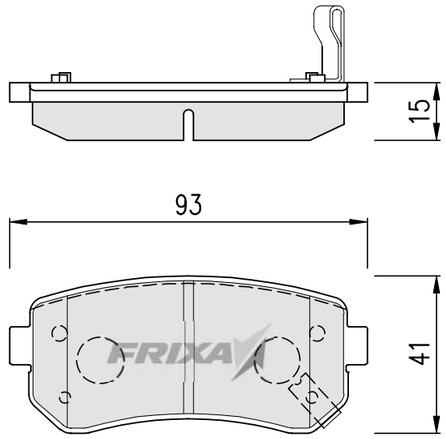

FPHXGR — HYUNDAI

PART NUMBER	**58215-383S0**
REPRESENTATIVE MODEL	GRANDEUR(AZERA) XG R
INTERCHANGEABLE	EF SONATA(98.04~00.12), NEW EF SONATA(01.01~04.08) NF SONATA(04.09~07.09), GRANDEUR(AZERA) XG, NEW

PO	SP	HP	FMSI	WVA	TRW
REAR (PAD)	SP1117	HP0008	D813-7688	23543	GDB3282

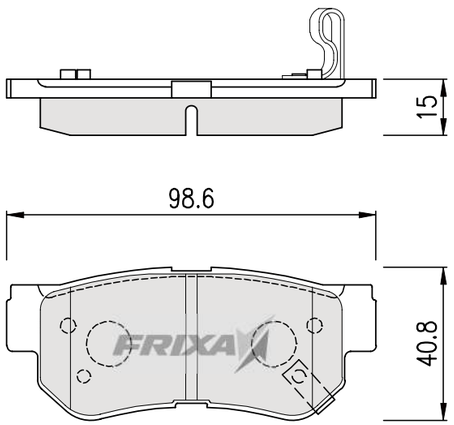

FPK01 — KIA

PART NUMBER	**D001-3328Z**
REPRESENTATIVE MODEL	PRIDE
INTERCHANGEABLE	PRIDE/BETA(86.~99.)

PO	SP	HP	FMSI	WVA	TRW
FRONT (PAD)	SP1049	HP1001	D402-7291	21355	GDB773

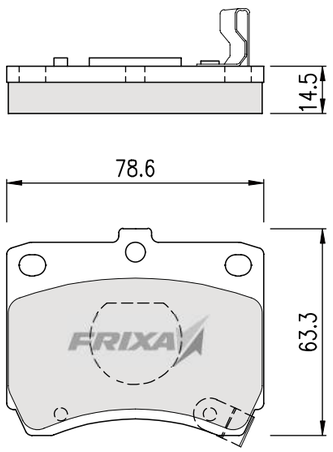

FPK02 — KIA

PART NUMBER	**0K900-49230**
REPRESENTATIVE MODEL	CONCORD
INTERCHANGEABLE	CONCORD CAPITAL

PO	SP	HP	FMSI	WVA	TRW
FRONT (PAD)	SP1051		D317-7169	21360	GDB1036

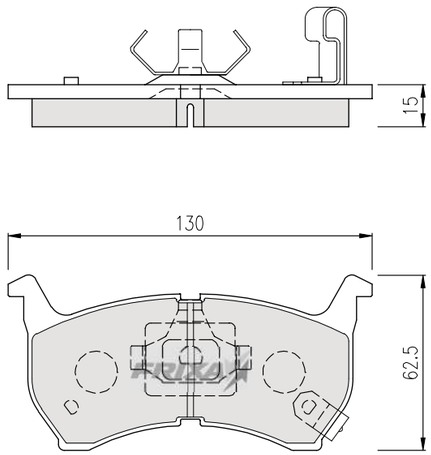

FPK03 — KIA

PART NUMBER	**0K20A-3323Z**
REPRESENTATIVE MODEL	SEPHIA
INTERCHANGEABLE	SEPHIA I/II(92.~00.06), SHUMA(97.03~99.)

PO	SP	HP	FMSI	WVA	TRW
FRONT (PAD)	SP1063	HP1003	D649-7529	23384	GDB3096

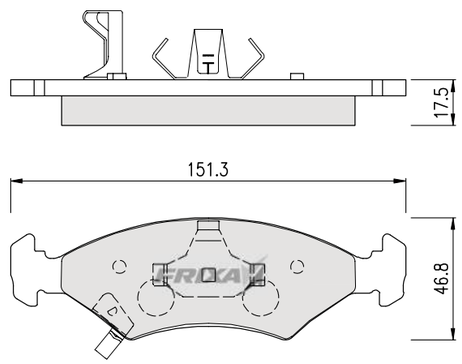

FPK04 — KIA

PART NUMBER	**0K9A0-3328Z**
REPRESENTATIVE MODEL	CREDOS
INTERCHANGEABLE	CREDOS(95.03~98.03)

PO	SP	HP	FMSI	WVA	TRW
FRONT (PAD)	SP1079-F	HP1007		23450	GDB3173

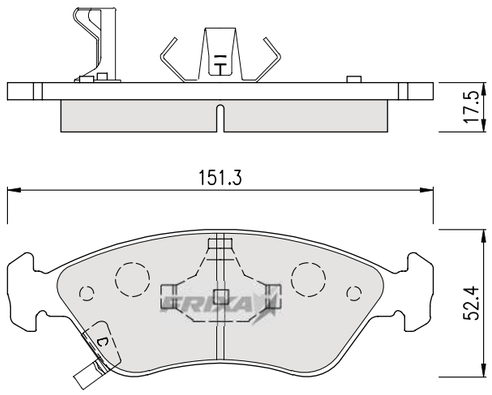

FPK04N — KIA

PART NUMBER	**0K2N1-3328Z**
REPRESENTATIVE MODEL	CREDOS II
INTERCHANGEABLE	CREDOS II(98.04~00.07), CARENS(RONDO)(99.06~02.03)

PO	SP	HP	FMSI	WVA	TRW
FRONT (PAD)	SP1113	HP1008	D889-7767	23873	GDB3245

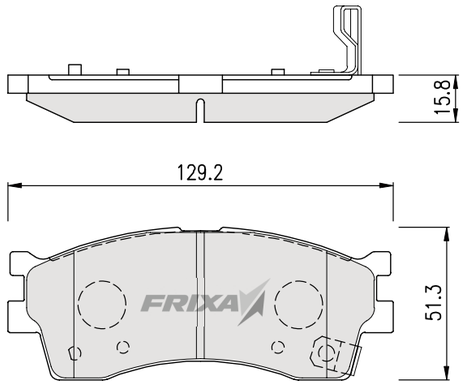

FPK06 — KIA

PART NUMBER	**0K998-3328Z**
REPRESENTATIVE MODEL	POTENTIA
INTERCHANGEABLE	POTENTIA(98.06~01.04)

PO	SP	HP	FMSI	WVA	TRW
FRONT (PAD)	SP1060-F	HP1005	7276-D389	21318	

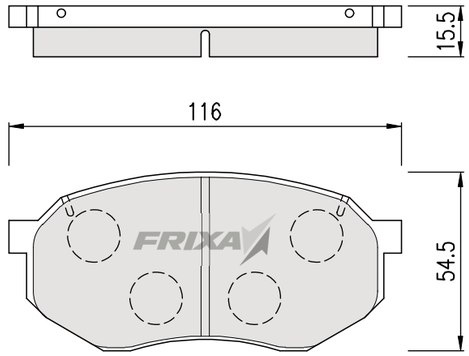

FPK06R — KIA

PART NUMBER	**0K9Y1-2643ZA**
REPRESENTATIVE MODEL	POTENTIA R
INTERCHANGEABLE	POTENTIA(NEW)(98.06~)

PO	SP	HP	FMSI	WVA	TRW
REAR (PAD)	SP1084	HP1006			

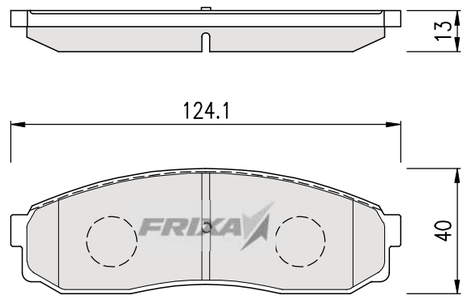

FPK04R — KIA

PART NUMBER	**0K2FA-2628Z**
REPRESENTATIVE MODEL	CREDOS R
INTERCHANGEABLE	CREDOS I/II(95.03~00.07), SEPHIA II(95.~99.), SHUMA(97.~99.)

PO	SP	HP	FMSI	WVA	TRW
REAR (PAD)	SP1079-R		D775-7642	23455	

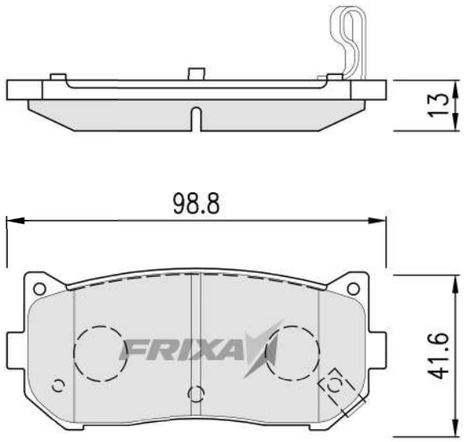

FPK05 — KIA

PART NUMBER	**0K30A-3328Z**
REPRESENTATIVE MODEL	AVELLA
INTERCHANGEABLE	AVELLA(94.02~99.12), ELAN(96.07~98.), RIO(99.11~02.05) FORD FESTIVA 94", FORD LASER 90", MAZDA 121 90"

PO	SP	HP	FMSI	WVA	TRW
FRONT (PAD)	SP1067	HP1002	D466-7219	21654	GDB1024

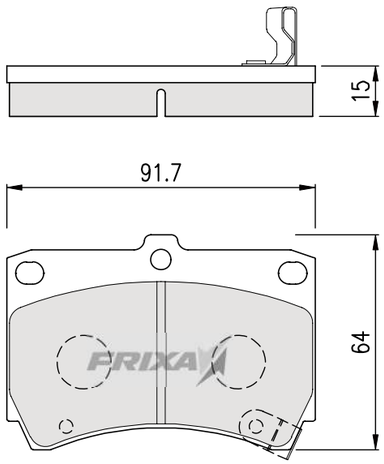

FPK07 — KIA

PART NUMBER	**0K011-3323Z**
REPRESENTATIVE MODEL	SPORTAGE
INTERCHANGEABLE	SPORTAGE(93.~00.)

PO	SP	HP	FMSI	WVA	TRW
FRONT (PAD)	SP1070	HP1028	D670-7550	21892	GDB3123

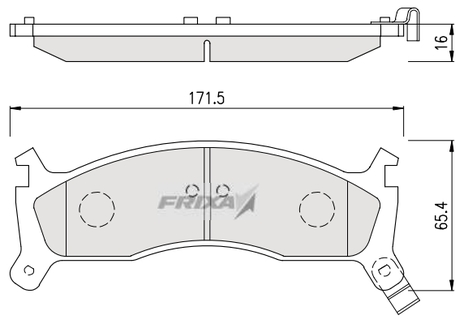

FPK07N — KIA

PART NUMBER	**0K045-3323Z**
REPRESENTATIVE MODEL	SPORTAGE GRAND
INTERCHANGEABLE	SPORTAGE GRAND(00.~02.), RETONA(00.~02.)

PO	SP	HP	FMSI	WVA	TRW
FRONT (PAD)	SP1118	HP1015	D774-7641	23442	GDB3241

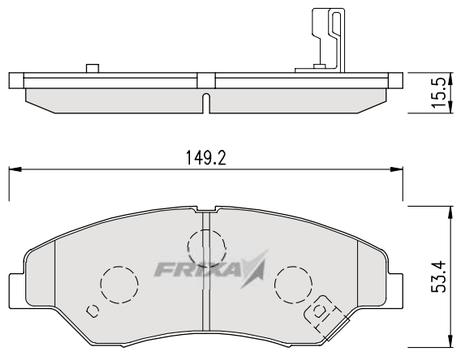

FPK08 — KIA

PART NUMBER	**0K70Y-3328Z**
REPRESENTATIVE MODEL	BESTA
INTERCHANGEABLE	BESTA(87.07~97.04), WIDE BONGO(96.01~97.04), FRONTIER(OLD)(97.10~99.06)

PO	SP	HP	FMSI	WVA	TRW
FRONT (PAD)	SP1044	HP1010	D1199-8319	20002	GDB737

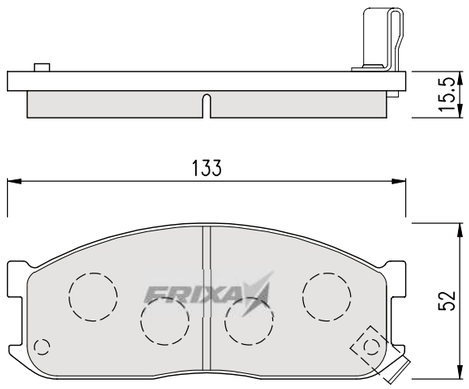

FPK09 — KIA

PART NUMBER	**0K60A-3328Z**
REPRESENTATIVE MODEL	NEW FRONTIER
INTERCHANGEABLE	NEW FRONTIER(99.06~03.12), TOPIC(87.~91.)

PO	SP	HP	FMSI	WVA	TRW
FRONT (PAD)	SP1056	HP1014	D1513-8722	23784	GDB3145

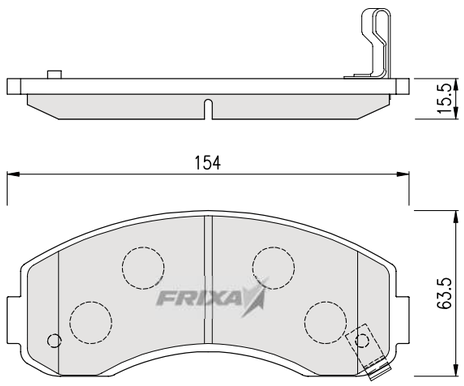

FPK11 — KIA

PART NUMBER	**AA100-33625**
REPRESENTATIVE MODEL	TOWNER
INTERCHANGEABLE	TOWNER(TRUCK/VAN)(96.~02.)

PO	SP	HP	FMSI	WVA	TRW
FRONT (PAD)	SP1073	HP1019		20780	

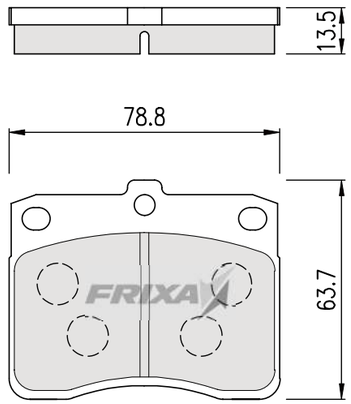

FPK13 — KIA

PART NUMBER	**OK552-3323Z**
REPRESENTATIVE MODEL	CARNIVAL(SEDONA)
INTERCHANGEABLE	CARNIVAL(SEDONA)(98.01~99.01)

PO	SP	HP	FMSI	WVA	TRW
FRONT (PAD)	SP1112	HP1011	D477-7338A	21822	GDB1153

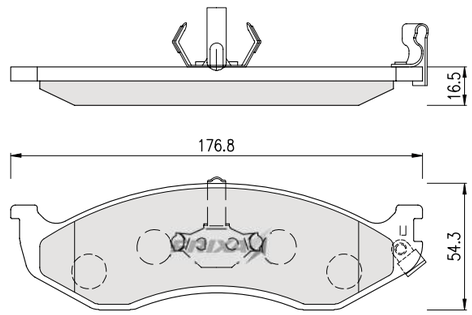

FPK10 — KIA

PART NUMBER	**0K72A-3328Z**
REPRESENTATIVE MODEL	PREGIO
INTERCHANGEABLE	PREGIO(95.10~98.05)

PO	SP	HP	FMSI	WVA	TRW
FRONT (PAD)	SP1091	HP1013		23484	GDB3263

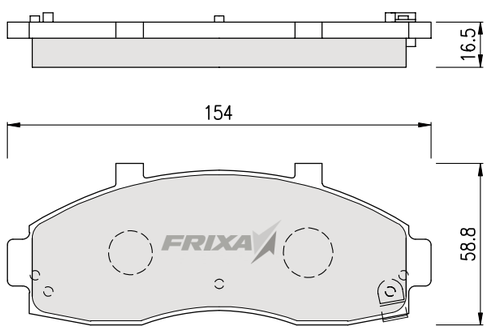

FPK10N — KIA

PART NUMBER	**0K56A-3323Z**
REPRESENTATIVE MODEL	NEW PREGIO
INTERCHANGEABLE	NEW PREGIO(98.06~03.12), CARNIVAL(SEDONA) II(99.01~03.12)

PO	SP	HP	FMSI	WVA	TRW
FRONT (PAD)	SP1116	HP1012		23649	GDB3261

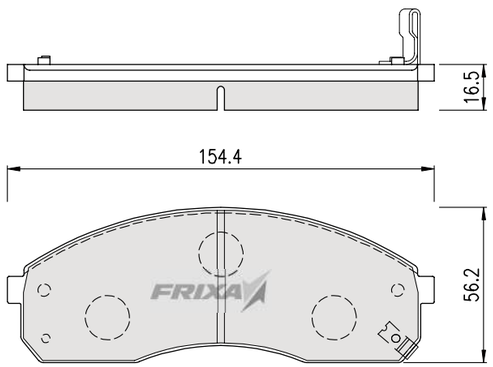

FPK14N — KIA

PART NUMBER	**0K2FA-3328Z**
REPRESENTATIVE MODEL	CARENS(RONDO) II
INTERCHANGEABLE	CARENS(RONDO) II(02.03~06.03), X-TREK(03.04~06.03)

PO	SP	HP	FMSI	WVA	TRW
FRONT (PAD)	SP1162	HP1020		23966	GDB3342

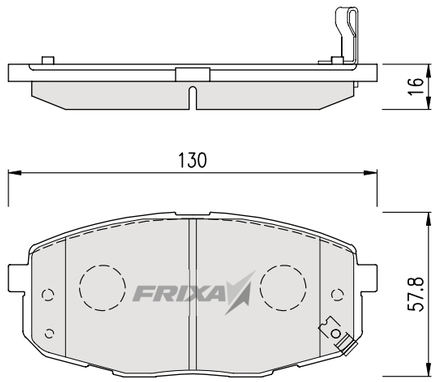

FPK15 — KIA

PART NUMBER	**58101-3E000**
REPRESENTATIVE MODEL	SORNETO
INTERCHANGEABLE	SORENTO(02.02~09.03)

PO	SP	HP	FMSI	WVA	TRW
FRONT (PAD)	SP1153	HP1017	D1301-8417	24092	GDB3452

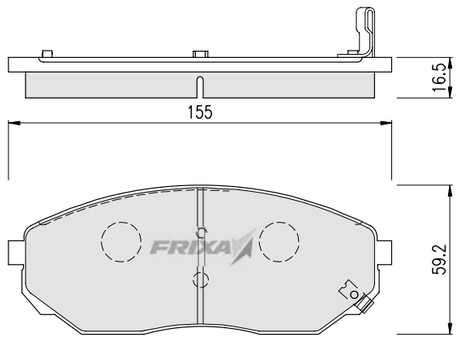

FPK15R — KIA

PART NUMBER	**58302-3ED00**
REPRESENTATIVE MODEL	SORENTO R
INTERCHANGEABLE	SORENTO(02.01~)

PO	SP	HP	FMSI	WVA	TRW
REAR (PAD)	SP1154	HP1018	D1261-8379	23993	GDB3344

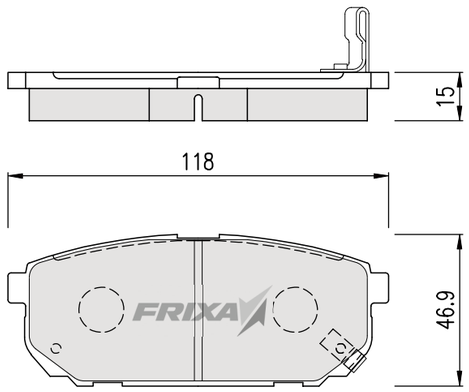

FPK16 — KIA

PART NUMBER	**0K40D-3328Z**
REPRESENTATIVE MODEL	BONGO III 1.4TON
INTERCHANGEABLE	FRONTIER1.3TON(99.06~03.12), BONGO III 1.4TON(04.01~) PAMAX1.4TON~3.5TON(04.01~

PO	SP	HP	FMSI	WVA	TRW
FRONT (PAD)	SP1148	HP1016			

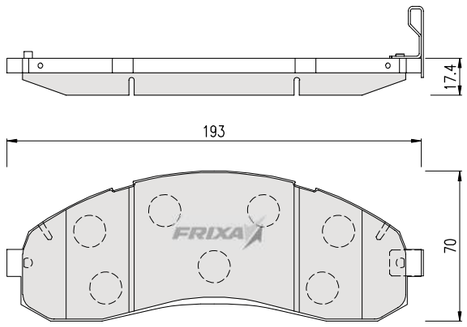

FPK17 — KIA

PART NUMBER	**58101-17A10**
REPRESENTATIVE MODEL	CERATO(FORTE)
INTERCHANGEABLE	CERATO(FORTE)1.5(14")(03.10~05.03), LAVITA(NEW)(02.04~) AVANTE(ELANTRA) XD1.5(ABS)(02.04~04.04)

PO	SP	HP	FMSI	WVA	TRW
FRONT (PAD)	SP1152	HP0027	D941-7843	24031	GDB3378

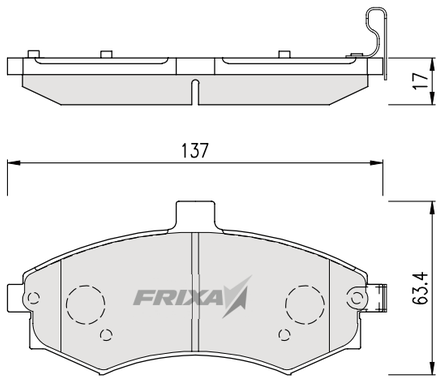

FPK17N — KIA

PART NUMBER	**58101-2FA10**
REPRESENTATIVE MODEL	CERATO(FORTE) 15"
INTERCHANGEABLE	CERATO(FORTE)2.0(15")(03.10~05.03)

PO	SP	HP	FMSI	WVA	TRW
FRONT (PAD)	SP1167	HP1031	D1074-7979	24218	GDB3367

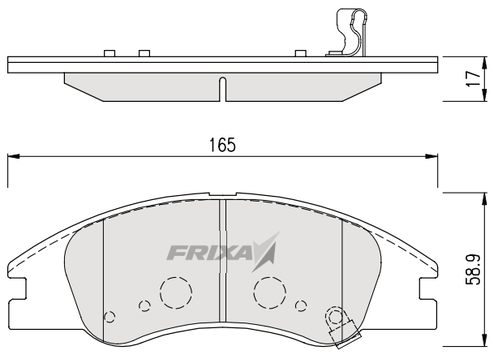

FPK18 — KIA

PART NUMBER	**58101-4EA00**
REPRESENTATIVE MODEL	BONGO III TRUCK
INTERCHANGEABLE	BONGO III TRUCK(04.01~)

PO	SP	HP	FMSI	WVA	TRW
FRONT (PAD)	SP1175	HP1023			

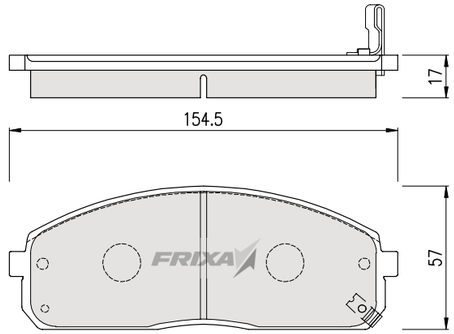

FPK19 — KIA

PART NUMBER	**58101-4EB00**
REPRESENTATIVE MODEL	BONGO III VAN
INTERCHANGEABLE	BONGO III VAN(04.01~)

PO	SP	HP	FMSI	WVA	TRW
FRONT (PAD)	SP1176	HP1024			

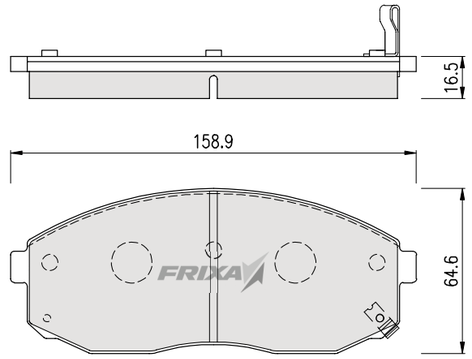

FPK20 — KIA

PART NUMBER	**58101-07A00**
REPRESENTATIVE MODEL	MORNING(PICANTO)
INTERCHANGEABLE	MORNING(PICANTO)(04.01~10.12)

PO	SP	HP	FMSI	WVA	TRW
FRONT (PAD)	SP1172	HP1025	D1601-8815	24275	

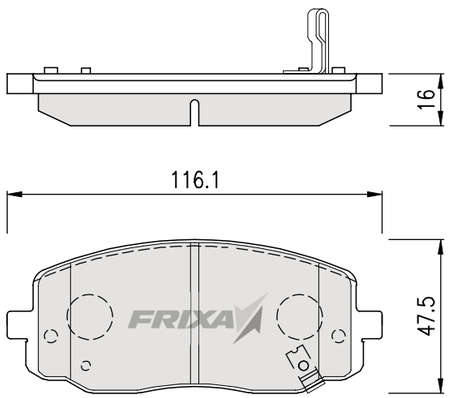

FPK20N — KIA

PART NUMBER	**58101-1YA00**
REPRESENTATIVE MODEL	MORNING(PICANTO) 11MY
INTERCHANGEABLE	MORNING(PICANTO) 11MY(11.02~), RAY(11.11~)

PO	SP	HP	FMSI	WVA	TRW
FRONT (PAD)	SP1405			25365	

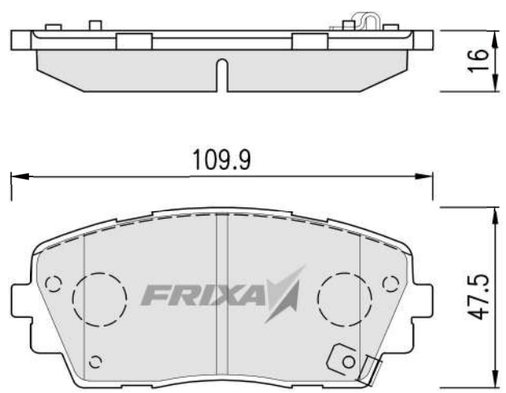

FPK20NR — KIA

PART NUMBER	**58302-1YA00**
REPRESENTATIVE MODEL	MORNING(PICANTO) 11MY R
INTERCHANGEABLE	MORNING(PICANTO) 11MY(11.02~), RAY(11.11~)

PO	SP	HP	FMSI	WVA	TRW
REAR (PAD)	SP1406				

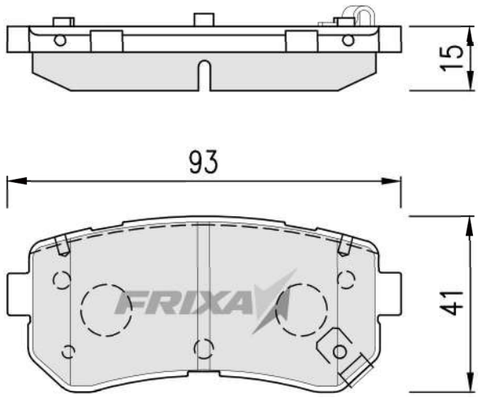

FPK20R — KIA

PART NUMBER	**58302-07A00**
REPRESENTATIVE MODEL	MORNING(PICANTO) R
INTERCHANGEABLE	MORNING(PICANTO)(04.01~10.12)

PO	SP	HP	FMSI	WVA	TRW
REAR (PAD)	SP1189			24276	

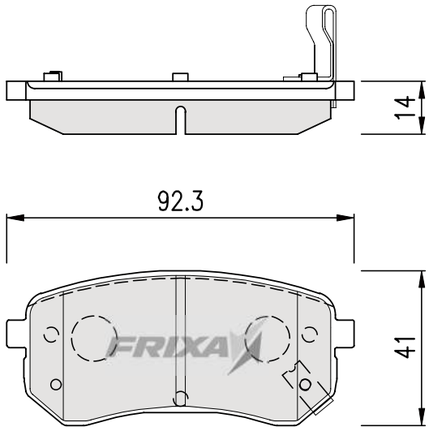

FPK22 — KIA

PART NUMBER	**58101-4DB00**
REPRESENTATIVE MODEL	GRAND CARNIVAL(SEDONA)
INTERCHANGEABLE	GRAND CARNIVAL(SEDONA)(17")(05.07~)

PO	SP	HP	FMSI	WVA	TRW
FRONT (PAD)	SP1191				

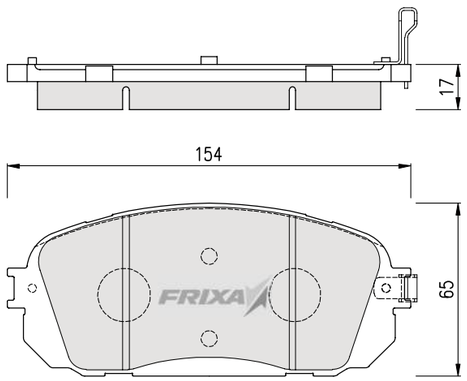

FPK23 — KIA

PART NUMBER	**0K95B-3328Z**
REPRESENTATIVE MODEL	ENTERPRISE
INTERCHANGEABLE	ENTERPRISE(97.07~02.10)

PO	SP	HP	FMSI	WVA	TRW
FRONT (PAD)	SP1145	HP1030			

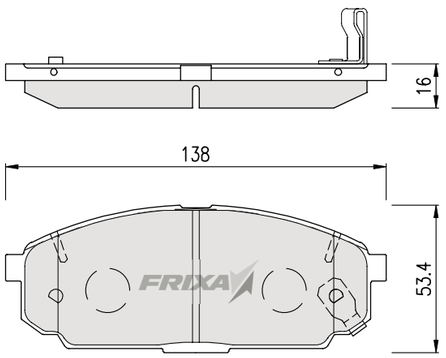

FPK24 — KIA

PART NUMBER	**58115-FDA00**
REPRESENTATIVE MODEL	RIO SF1.3
INTERCHANGEABLE	RIO SF1.3(13")(02.06~05.03)

PO	SP	HP	FMSI	WVA	TRW
FRONT (PAD)	SP1164	HP1022	D1515-8724		

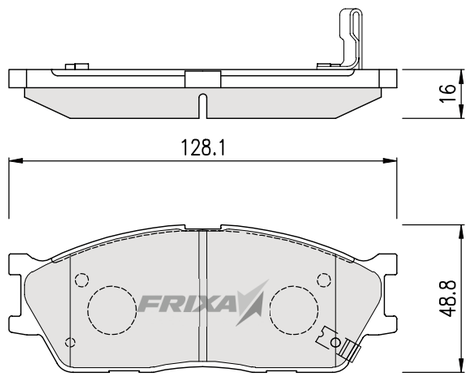

FPK25 — KIA

PART NUMBER	**58101-0ZA00**
REPRESENTATIVE MODEL	K7(CADENZA)
INTERCHANGEABLE	NEW CARENS(RONDO)(06MY)(06.04~), K7(CADENZA)(09.12~), YF SONATA 2.4 (09.09~), LF SONATA 16"(14.03~)

PO	SP	HP	FMSI	WVA	TRW
FRONT (PAD)	SP1196		D1295-8614	24501	

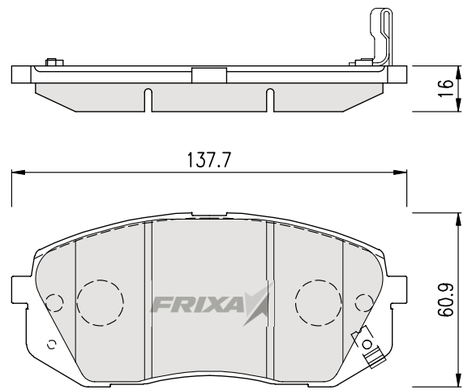

FPK25R — KIA

PART NUMBER	**58302-1DA00**
REPRESENTATIVE MODEL	NEW CARENS(RONDO) R
INTERCHANGEABLE	NEW CARENS(RONDO)(06.04~)

PO	SP	HP	FMSI	WVA	TRW
REAR (PAD)	SP1197		D1296-8413	24491	

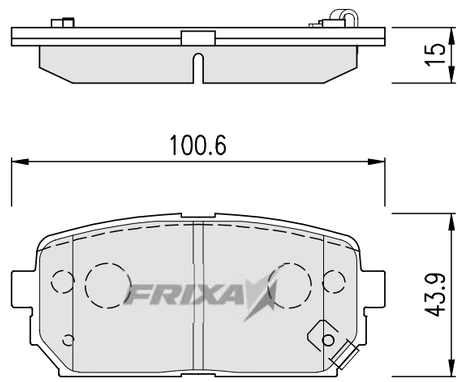

FPK26 — KIA

PART NUMBER	**58101-2JA00**
REPRESENTATIVE MODEL	MOHAVE(BOREGO)
INTERCHANGEABLE	MOHAVE(BOREGO)(08.01~)

PO	SP	HP	FMSI	WVA	TRW
FRONT (PAD)	SP1248		D1385-8493		

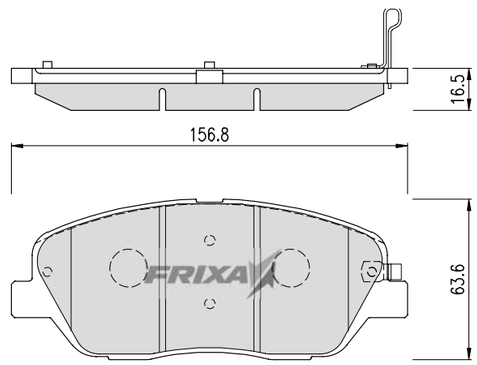

FPK27 — KIA

PART NUMBER	**58101-2TA00**
REPRESENTATIVE MODEL	K5(NEW OPTIMA) 15"
INTERCHANGEABLE	K5(NEW OPTIMA) 2.0 (10.05~), LPG TYPE

PO	SP	HP	FMSI	WVA	TRW
FRONT (PAD)	SP1397				

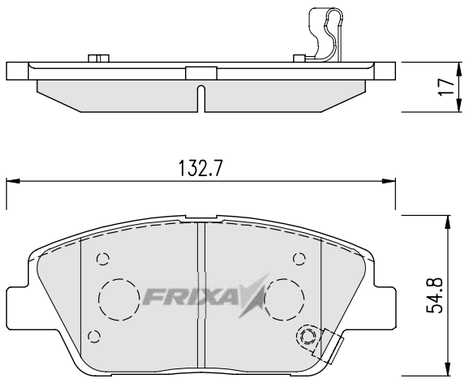

FPK28 — KIA

PART NUMBER	**58101-3QA10**
REPRESENTATIVE MODEL	K5(NEW OPTIMA) 16"
INTERCHANGEABLE	K5(NEW OPTIMA) 2.4 (10.05~), K5(NEW OPTIMA) 2.0 GDI (~17")(11.07~)

PO	SP	HP	FMSI	WVA	TRW
FRONT (PAD)	SP1398		D1444-8595	25644	

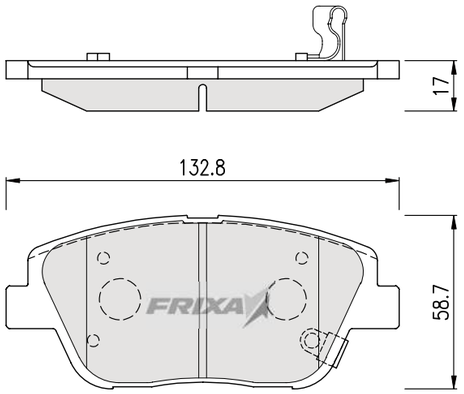

FPK30R — KIA

PART NUMBER	**58302-3MA30**
REPRESENTATIVE MODEL	K9 3.3 R
INTERCHANGEABLE	K9 3.3(12.03~)

PO	SP	HP	FMSI	WVA	TRW
REAR (PAD)	SP1546		D1551-8761		

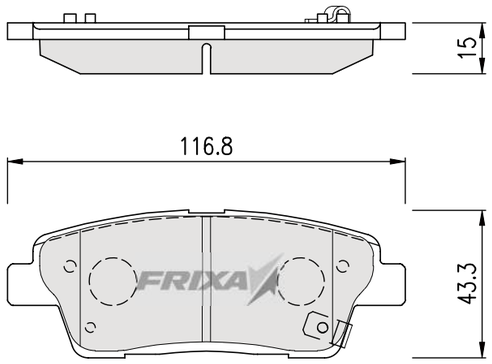

FPK31 — KIA

PART NUMBER	**58101-A9A00**
REPRESENTATIVE MODEL	ALL NEW CARNIVAL F
INTERCHANGEABLE	

PO	SP	HP	FMSI	WVA	TRW
FRONT (PAD)	SP1688				

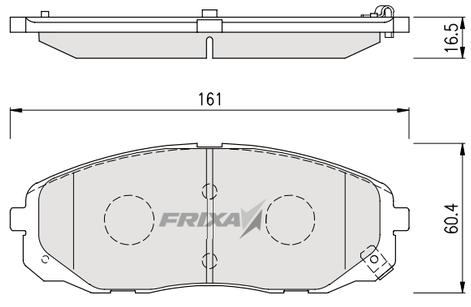

FPK29(FPH18) — KIA

PART NUMBER	**58101-0WA00**
REPRESENTATIVE MODEL	SORENTO R 09MY
INTERCHANGEABLE	NEW SANTAFE 06MY, 12MY(05.11~), CHAIRMAN H(10.01~)

PO	SP	HP	FMSI	WVA	TRW
FRONT (PAD)	SP1194		D1202-8322	24351	

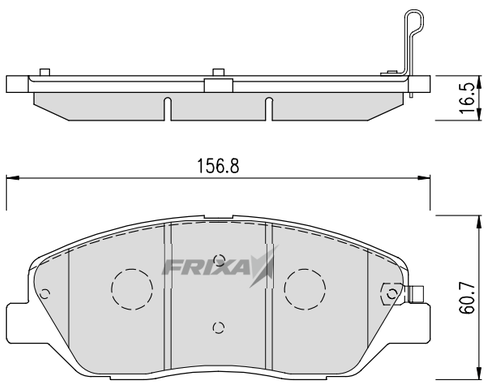

FPK30 — KIA

PART NUMBER	**58101-3TA10**
REPRESENTATIVE MODEL	K9 3.3
INTERCHANGEABLE	K9 3.3(12.03~), ALL NEW CARENS(13.03~)

PO	SP	HP	FMSI	WVA	TRW
FRONT (PAD)	SP1545				

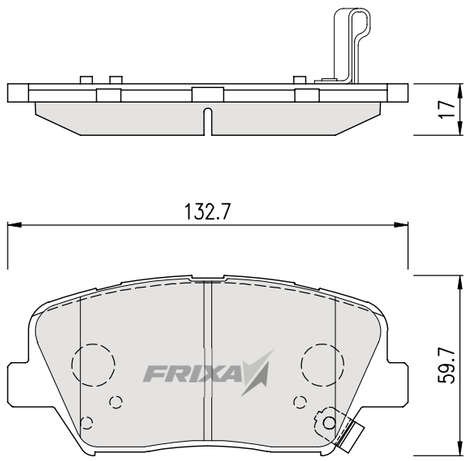

FPK32 — KIA

PART NUMBER	**58101-C5A00**
REPRESENTATIVE MODEL	ALL NEW SORENTO F
INTERCHANGEABLE	

PO	SP	HP	FMSI	WVA	TRW
FRONT (PAD)	SP1690				

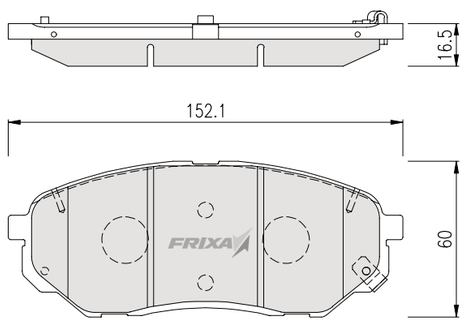

FPK32R — KIA

PART NUMBER	**58302-C5A00**
REPRESENTATIVE MODEL	ALL NEW SORENTO R
INTERCHANGEABLE	

PO	SP	HP	FMSI	WVA	TRW
REAR (PAD)	SP1691				

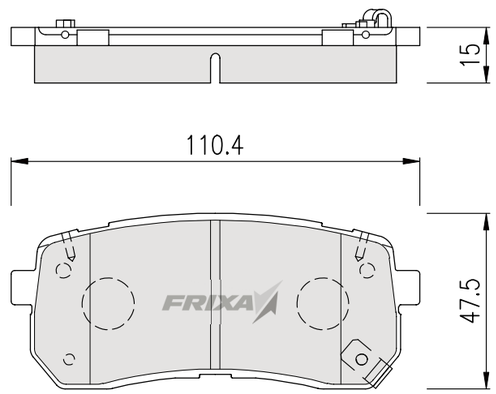

FPK33 — KIA

PART NUMBER	**58101 F6A10**
REPRESENTATIVE MODEL	ALL NEW K7
INTERCHANGEABLE	GRANDEUR IG

PO	SP	HP	FMSI	WVA	TRW
FRONT (PAD)	SP1986				

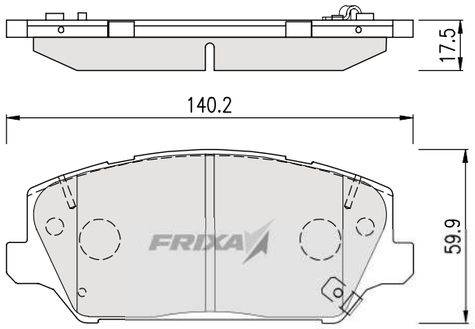

FPK33R — KIA

PART NUMBER	**58302 F6A00**
REPRESENTATIVE MODEL	ALL NEW K7
INTERCHANGEABLE	GRANDEUR IG

PO	SP	HP	FMSI	WVA	TRW
REAR (PAD)	SP1987				

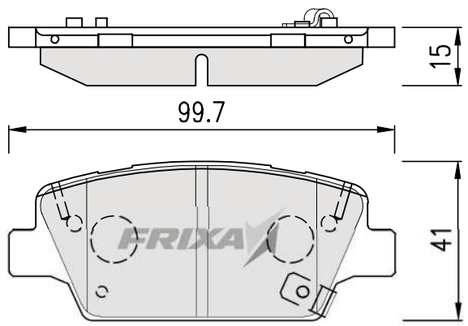

FPK34 — KIA

PART NUMBER	**58101 G6A00**
REPRESENTATIVE MODEL	ALL NEW MORNING 17MY 13"
INTERCHANGEABLE	

PO	SP	HP	FMSI	WVA	TRW
FRONT (PAD)	SP1982	HP0058			

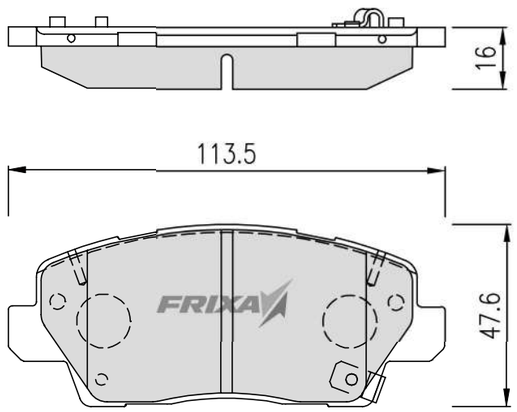

FPK34R — KIA

PART NUMBER	**58302 G6A00**
REPRESENTATIVE MODEL	ALL NEW MORNING 17MY R
INTERCHANGEABLE	

PO	SP	HP	FMSI	WVA	TRW
REAR (PAD)	SP1975	HP1060			

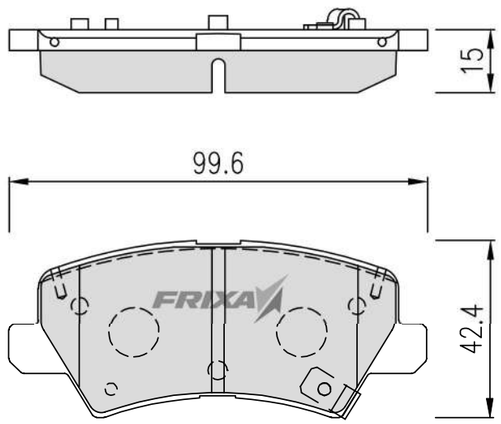

FPK35 — KIA

PART NUMBER	**58101 G6A30**
REPRESENTATIVE MODEL	ALL NEW MORNING 17MY 14"
INTERCHANGEABLE	

PO	SP	HP	FMSI	WVA	TRW
FRONT (PAD)	SP1983	HP0059			

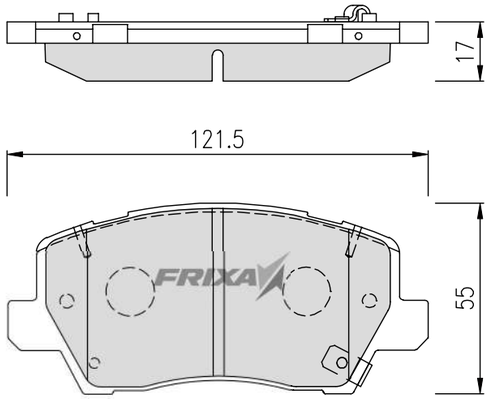

FPS01 — RENAULT SAMSUNG

PART NUMBER	**41060-2Y090**
REPRESENTATIVE MODEL	SM-5
INTERCHANGEABLE	518/520/525(98.~05.03), INFINITI G20 99" INFINITI G20 01", INFINITI G20 02"

PO	SP	HP	FMSI	WVA	TRW
FRONT (PAD)	SP1107-F	HP3001	D430-7832,	21561	GDB1003

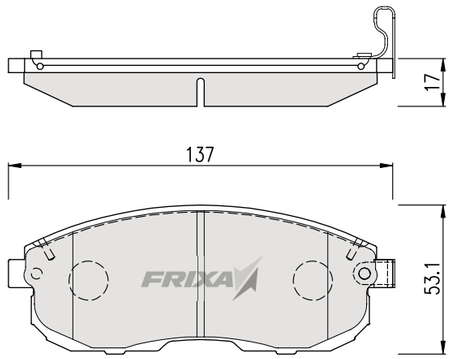

FPS01NR — RENAULT SAMSUNG

PART NUMBER	**44060-4U092**
REPRESENTATIVE MODEL	SM-5 02MY R
INTERCHANGEABLE	SM-5 02MY(02.07~05.03)

PO	SP	HP	FMSI	WVA	TRW
REAR (PAD)	SP1163	HP3003	D900-7777	24039	

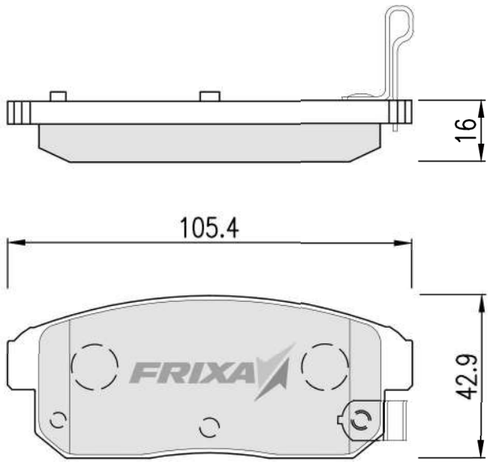

FPS01R — RENAULT SAMSUNG

PART NUMBER	**48311-51110K0**
REPRESENTATIVE MODEL	SM-5 R
INTERCHANGEABLE	518/520/525(98.~05.03), INFINITI G20 (P10) 90",95"99",01",02", INFINITI I30 96",01", NISSAN 100NX(B13) 90"

PO	SP	HP	FMSI	WVA	TRW
REAR (PAD)	SP1107-R	HP3002	D540-7533	21713	GDB1172

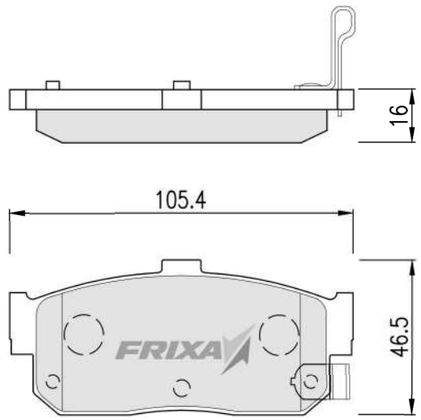

FPS02 — RENAULT SAMSUNG

PART NUMBER	**41060-4M490**
REPRESENTATIVE MODEL	SM-3
INTERCHANGEABLE	SM-3(02.~09.06)

PO	SP	HP	FMSI	WVA	TRW
FRONT (PAD)	SP1156	HP3004	D1193-8311	24647	GDB7043

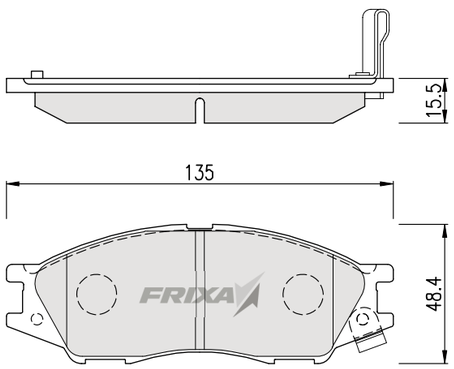

FPS03 — RENAULT SAMSUNG

PART NUMBER	**48111-52100K0**
REPRESENTATIVE MODEL	SM-7
INTERCHANGEABLE	NEW SM-5(LATITUDE) (05.04~10.12), SM-7(05.04~11.07)

PO	SP	HP	FMSI	WVA	TRW
FRONT (PAD)	SP1183	HP3005			

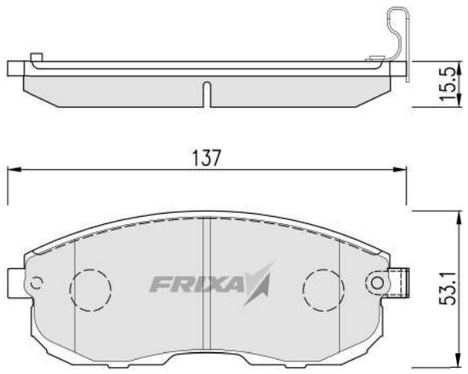

FPS04R — RENAULT SAMSUNG

PART NUMBER	**41060-1408R**
REPRESENTATIVE MODEL	QM-5 R
INTERCHANGEABLE	QM-5(07.12~)

PO	SP	HP	FMSI	WVA	TRW
REAR (PAD)	SP1250				

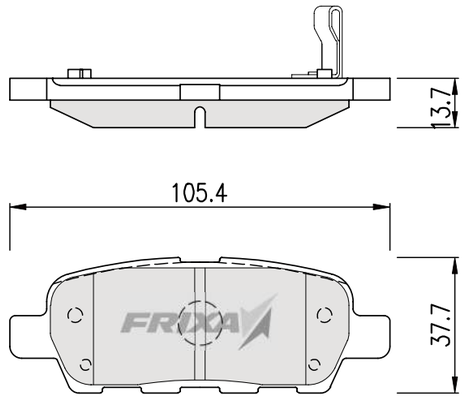

FPS05 — RENAULT SAMSUNG

PART NUMBER	**44060-3905R**
REPRESENTATIVE MODEL	NEW SM-3
INTERCHANGEABLE	NEW SM-3(09.07~), QM-3(13.12~)

PO	SP	HP	FMSI	WVA	TRW
FRONT (PAD)	SP1390		D1627-8844	24914	GDB1789

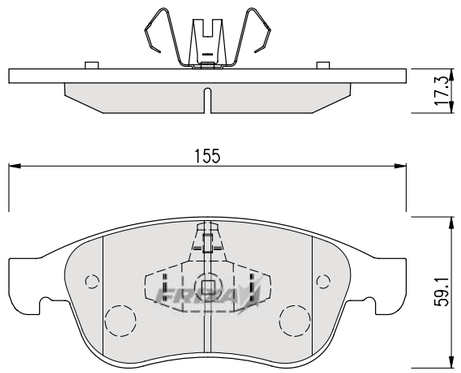

FPS03R — RENAULT SAMSUNG

PART NUMBER	**44060-8H385**
REPRESENTATIVE MODEL	SM-7 R
INTERCHANGEABLE	NEW SM-5(LATITUDE) (05.04~10.12), SM-7(05.04~11.07) INFINITI FX(S50) 03", INFINITI FX35 03",06"

PO	SP	HP	FMSI	WVA	TRW
REAR (PAD)	SP1184		D1393-8501	23814	GDB3294

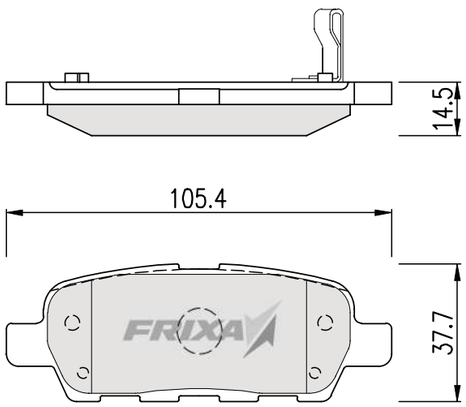

FPS04 — RENAULT SAMSUNG

PART NUMBER	**41060-0V790**
REPRESENTATIVE MODEL	QM-5
INTERCHANGEABLE	QM-5(07.12~)

PO	SP	HP	FMSI	WVA	TRW
FRONT (PAD)	SP1249		D888-7766	23698	

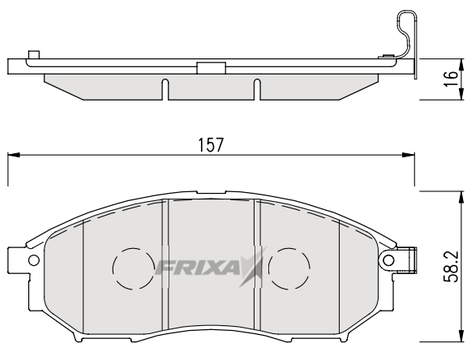

FPS05R — RENAULT SAMSUNG

PART NUMBER	**44060-2070R**
REPRESENTATIVE MODEL	NEW SM-3 R
INTERCHANGEABLE	NEW SM-3(09.07~), SM6(16.03~)

PO	SP	HP	FMSI	WVA	TRW
REAR (PAD)	SP1391		D340-7234	20261	GDB1196

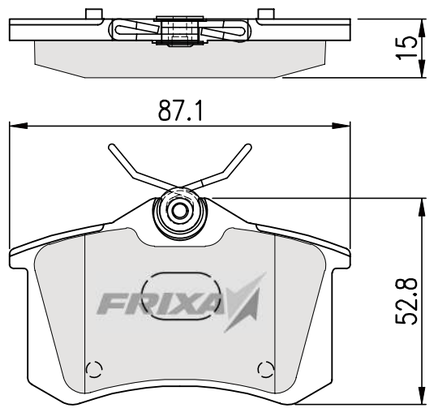

FPS06 — RENAULT SAMSUNG

PART NUMBER	**41060-1605R**
REPRESENTATIVE MODEL	NEW SM-5 11MY
INTERCHANGEABLE	NEW SM-5(LATITUDE) 11MY(11.01~)

PO	SP	HP	FMSI	WVA	TRW
FRONT (PAD)	SP1107-FA		D815-7318	24280	

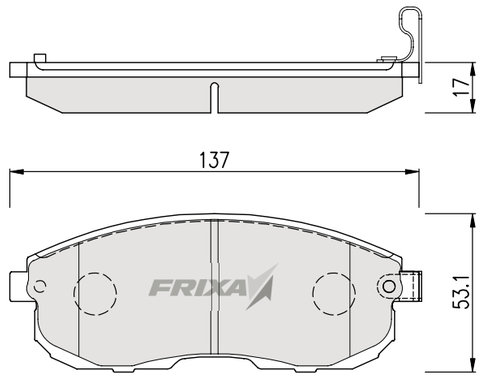

FPS06R — RENAULT SAMSUNG

PART NUMBER	**44060-2154R**
REPRESENTATIVE MODEL	NEW SM-5 R
INTERCHANGEABLE	NEW SM-5(LATITUDE) 11MY(11.01~), ALL NEW SM-7(11.08~)

PO	SP	HP	FMSI	WVA	TRW
REAR (PAD)	SP1396		D1757-8985	25265	

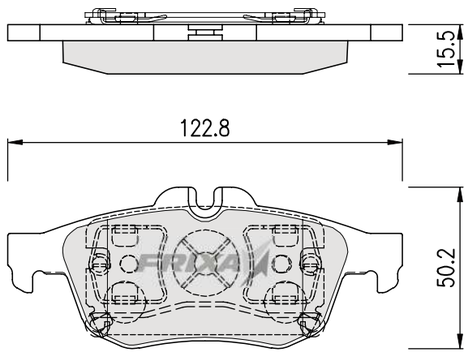

FPS07 — RENAULT SAMSUNG

PART NUMBER	**41060-0311R**
REPRESENTATIVE MODEL	ALL NEW SM-7
INTERCHANGEABLE	ALL NEW SM-7(11.08~)

PO	SP	HP	FMSI	WVA	TRW
FRONT (PAD)	SP1516				

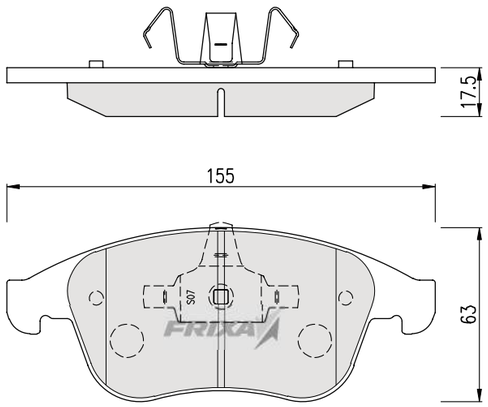

FPS09 — RENAULT SAMSUNG

PART NUMBER	**41060 3152R**
REPRESENTATIVE MODEL	ALL NE SM-7 14MY
INTERCHANGEABLE	

PO	SP	HP	FMSI	WVA	TRW
FRONT (PAD)	SP1778				

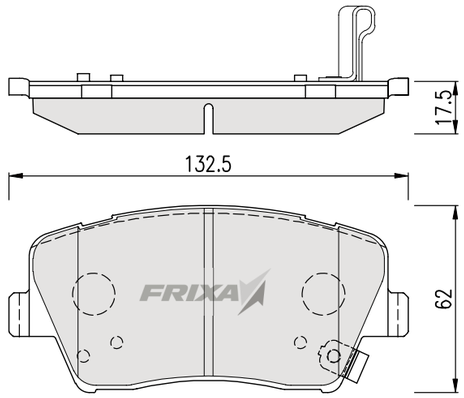

FPS10 — RENAULT SAMSUNG

PART NUMBER	**41060 7018R**
REPRESENTATIVE MODEL	SM-6
INTERCHANGEABLE	NEW SM-3(09.07~), QM-3(13.12~)

PO	SP	HP	FMSI	WVA	TRW
FRONT (PAD)	SP1704				

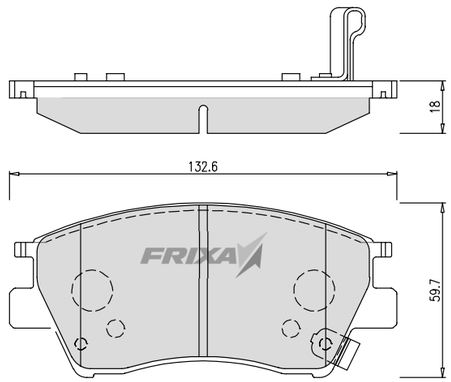

FPS08 — RENAULT SAMSUNG

PART NUMBER	**41060-8736R**
REPRESENTATIVE MODEL	SM-3 13MY
INTERCHANGEABLE	

PO	SP	HP	FMSI	WVA	TRW
FRONT (PAD)	SP1687				

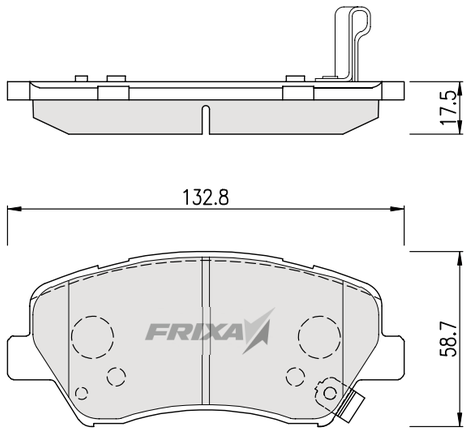

FPS08R — RENAULT SAMSUNG

PART NUMBER	**44060-4694R**
REPRESENTATIVE MODEL	SM-3 13MY
INTERCHANGEABLE	

PO	SP	HP	FMSI	WVA	TRW
REAR (PAD)	SP1839			24820	

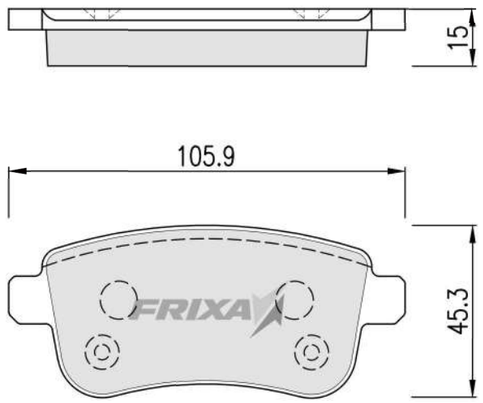

FPS10R — RENAULT SAMSUNG

PART NUMBER	**44060 7082R**
REPRESENTATIVE MODEL	SM-6 EPB
INTERCHANGEABLE	

PO	SP	HP	FMSI	WVA	TRW
REAR (PAD)	SP1903				

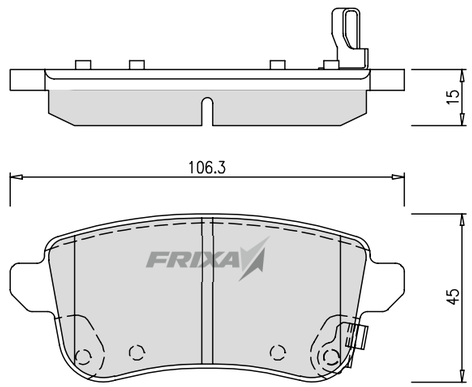

FPS11 — RENAULT SAMSUNG

PART NUMBER	**41060 7185R**
REPRESENTATIVE MODEL	QM-6
INTERCHANGEABLE	

PO	SP	HP	FMSI	WVA	TRW
FRONT (PAD)	SP1714		D1736-8906	25910	

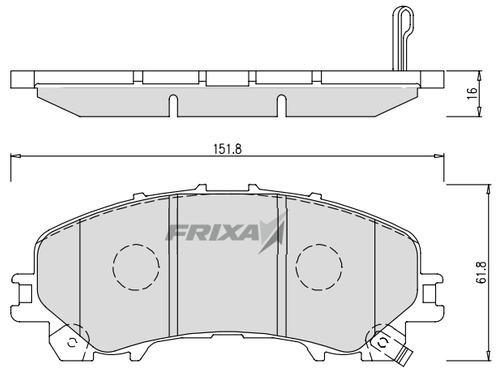

FPS11R — RENAULT SAMSUNG

PART NUMBER	**44060 3981R**
REPRESENTATIVE MODEL	QM-6
INTERCHANGEABLE	

PO	SP	HP	FMSI	WVA	TRW
REAR (PAD)	SP4140				

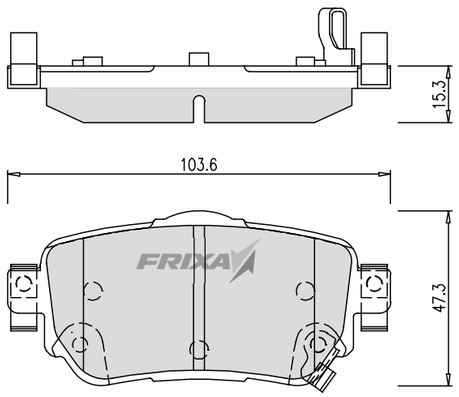

FPY01 — SSANGYONG

PART NUMBER	**66142-03021**
REPRESENTATIVE MODEL	ISTANA
INTERCHANGEABLE	ISTANA(95.~03.06)

PO	SP	HP	FMSI	WVA	TRW
FRONT (PAD)	SP1083	HP4003			GDB7614

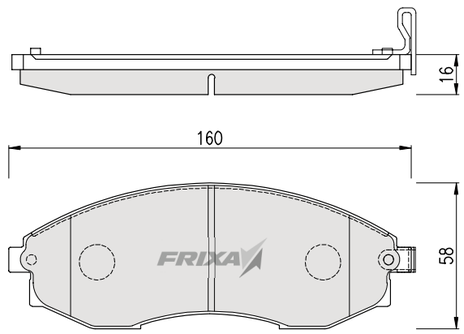

FPY02 — SSANGYONG

PART NUMBER	**48130-05000**
REPRESENTATIVE MODEL	MUSSO
INTERCHANGEABLE	MUSSO, MUSSO SPORTS(97.12~08.08), KORANDO FAMILY(88.10~99.10)

PO	SP	HP	FMSI	WVA	TRW
FRONT (PAD)	SP1065	HP4001	D449-7329	21725	GDB3101

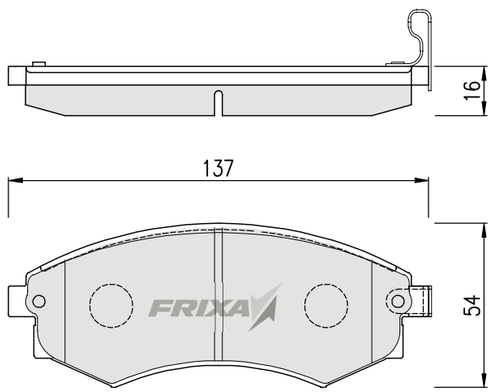

FPY03 — SSANGYONG

PART NUMBER	**48130-08050**
REPRESENTATIVE MODEL	REXTON
INTERCHANGEABLE	REXTON(01.~03.12)

PO	SP	HP	FMSI	WVA	TRW
FRONT (PAD)	SP1144	HP4004		21725	

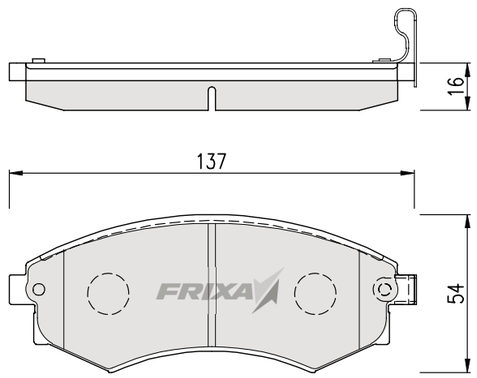

FPY03R — SSANGYONG

PART NUMBER	**48413-090A0**
REPRESENTATIVE MODEL	REXTON R
INTERCHANGEABLE	MUSSO(97.12~08.08), CHAIRMAN H(08.02~11.06)

PO	SP	HP	FMSI	WVA	TRW
REAR (PAD)	SP1151	HP4002		23673	GDB3382

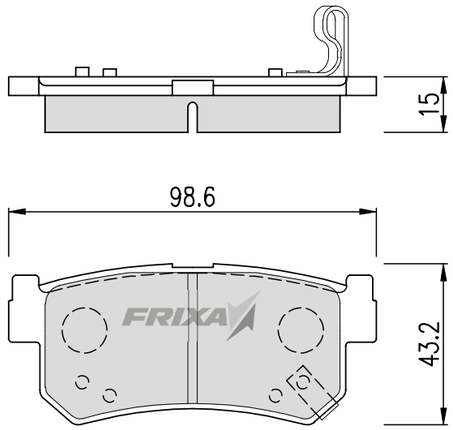

FPY04 — SSANGYONG

PART NUMBER	**48150-110A2**
REPRESENTATIVE MODEL	CHAIRMAN
INTERCHANGEABLE	CHAIRMAN, NEW CHAIRMAN(97.07~08.03)

PO	SP	HP	FMSI	WVA	TRW
FRONT (PAD)	SP1088	HP4005			

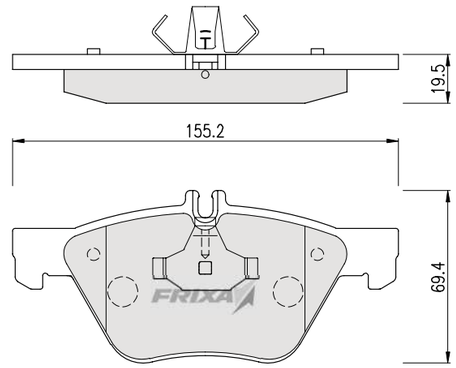

FPY04R — SSANGYONG

PART NUMBER	**48450-110A0**
REPRESENTATIVE MODEL	CHAIRMAN R
INTERCHANGEABLE	CHAIRMAN, NEW CHAIRMAN(97.07~08.03)

PO	SP	HP	FMSI	WVA	TRW
REAR (PAD)	SP1089				

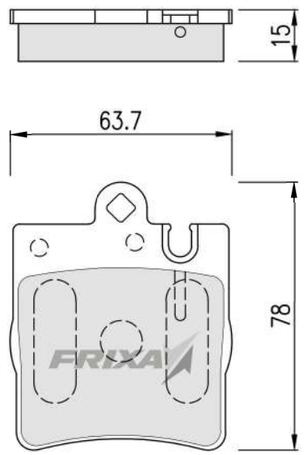

FPY05R — SSANGYONG

PART NUMBER	**48413-091A0**
REPRESENTATIVE MODEL	RODIUS(STAVIC) R
INTERCHANGEABLE	RODIUS(STAVIC)(04.06~), KYRON IRS(05.06~11.12), ACTYON IRS(05.10~10.12)

PO	SP	HP	FMSI	WVA	TRW
REAR (PAD)	SP1173		D954-7853	23931	GDB3413

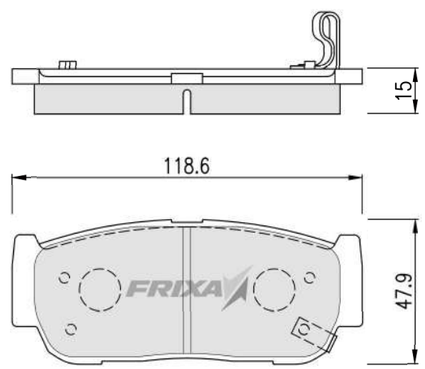

FPY06 — SSANGYONG

PART NUMBER	**48130-08250**
REPRESENTATIVE MODEL	KYRON
INTERCHANGEABLE	KYRON(05.06~11.12), NEW REXTON(06.04~) ACTYON(05.10~10.12), KORANDO C SPORTS(12.01~)

PO	SP	HP	FMSI	WVA	TRW
FRONT (PAD)	SP1171	HP4007	D903-7739	23569	GDB3244

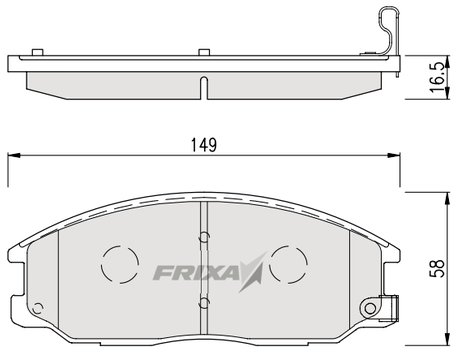

FPY07 — SSANGYONG

PART NUMBER	**48130 140B0**
REPRESENTATIVE MODEL	CHAIRMAN W
INTERCHANGEABLE	

PO	SP	HP	FMSI	WVA	TRW
FRONT (PAD)	HP1251				

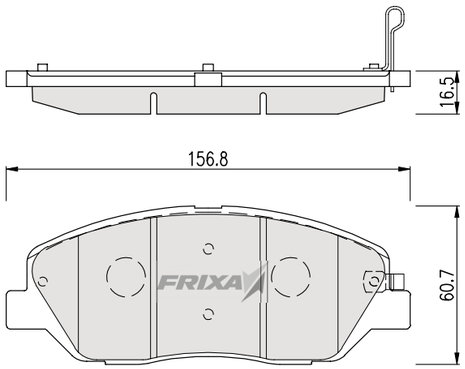

FPY08 — SSANGYONG

PART NUMBER	**48130-350A0**
REPRESENTATIVE MODEL	TIVOLI
INTERCHANGEABLE	

PO	SP	HP	FMSI	WVA	TRW
FRONT (PAD)	SP1761				

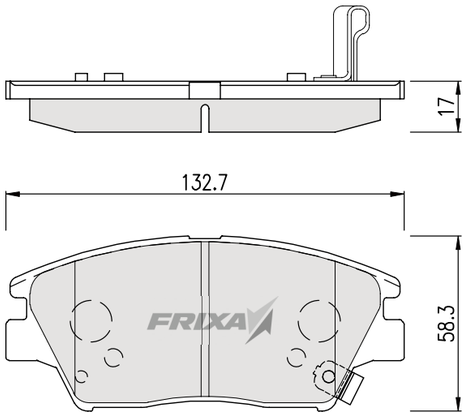

FPE011 — TOYOTA

PART NUMBER	**04465-22040**
REPRESENTATIVE MODEL	CROWN
INTERCHANGEABLE	GBS12,GXS1(01.08~07.06), DBA-TSS10H(08.08~)

PO	SP	HP	FMSI	WVA	TRW
FRONT (PAD)	SP1060-FB	HP5228	D433-7320	21318	GDB7181

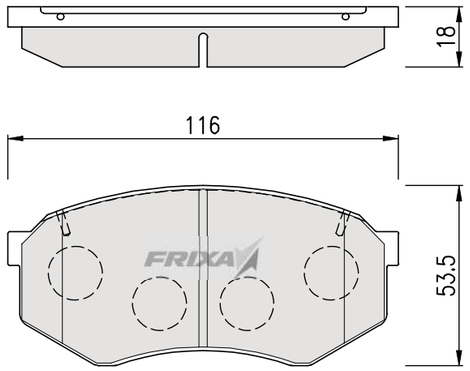

FPE012 — NISSAN

PART NUMBER	**41000-10G08**
REPRESENTATIVE MODEL	CREW
INTERCHANGEABLE	HK30,QK30,SK30,TSK30(93.07~96.09), THK30,YHK30(94.01~96.09)

PO	SP	HP	FMSI	WVA	TRW
FRONT (PAD)	SP1140	HP8374	D1144-7433	21347	GDB1017

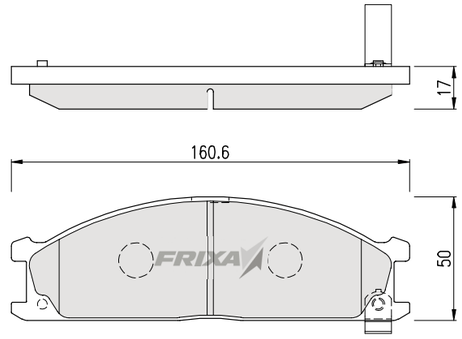

FPE013 — TOYOTA

PART NUMBER	**04465-30300**
REPRESENTATIVE MODEL	MARK II /CHASER/ CRESTA
INTERCHANGEABLE	GX110,GX110W,JZX110,JZX110W(00.10~07.06)

PO	SP	HP	FMSI	WVA	TRW
FRONT (PAD)	SP1566		D1733-8957		GDB3316

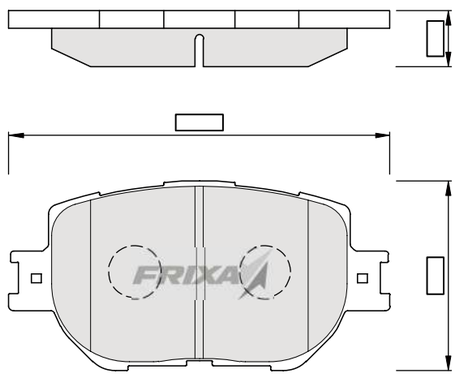

FPE014 — TOYOTA

PART NUMBER	**04466-22180**
REPRESENTATIVE MODEL	CROWN
INTERCHANGEABLE	GS171,GS171W,173W,JZS173,JZS171,JZS171W, JZS171,JZS171W,JZS179,

PO	SP	HP	FMSI	WVA	TRW
REAR (PAD)	SP1554	HP5083	D771-7638	21790	GDB3233

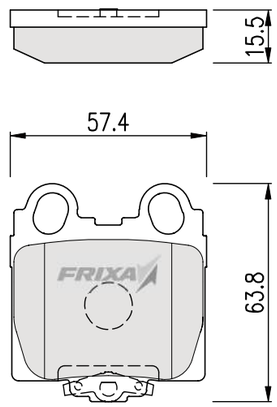

FPE015 — DAIHATSU

PART NUMBER	**04491-87507-000**
REPRESENTATIVE MODEL	HIJET
INTERCHANGEABLE	S100V,S110V,S100W,S110W,S120V,S130V(94.01~98.12) S140V(97.09~98.12), S200V,S210V(98.12~)

PO	SP	HP	FMSI	WVA	TRW
FRONT (PAD)					GDB7176

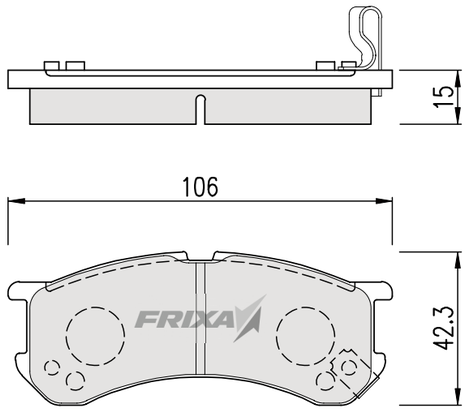

FPE016 — ISUZU

PART NUMBER	**8-97203209**
REPRESENTATIVE MODEL	ELF
INTERCHANGEABLE	NKR66,NPR66,NKR71,NPR71,NPR72,NPR75(99.04~), NKR81(02.04~)

PO	SP	HP	FMSI	WVA	TRW
FRONT (PAD)					GDB7241

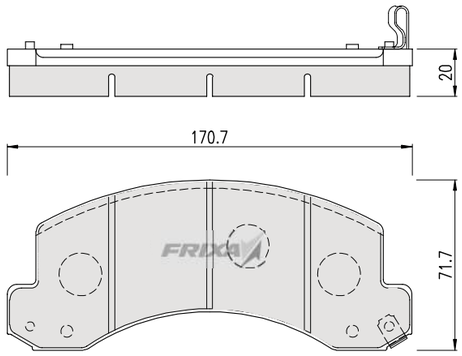

FPE017 — MITSUBISHI

PART NUMBER	**MK449107**
REPRESENTATIVE MODEL	CANTER
INTERCHANGEABLE	FE70B,FE72B,FE71B,FE88D(04.04~) FE70C,FE71C,FE72C,FE73C,FE82C,FE83C,FE72E

PO	SP	HP	FMSI	WVA	TRW
FRONT (PAD)					GDB7243

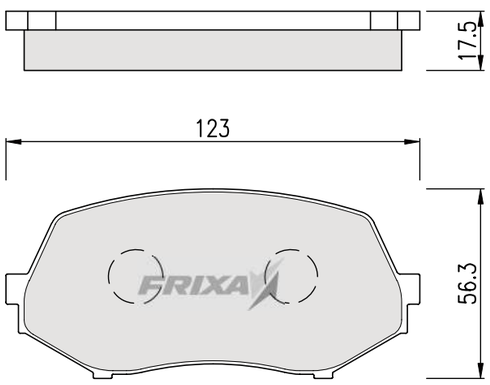

FPE06 — NISSAN

PART NUMBER	**41060-0V090**
REPRESENTATIVE MODEL	PRIMERA
INTERCHANGEABLE	QP12(02.02~05.12), HNP11,HP11,WHNP11,WHP11(97.09~01.01) WTP12,WTP12,WTNP12(01.01~07.12)

PO	SP	HP	FMSI	WVA	TRW
FRONT (PAD)	SP1107-FA	HP8347	DB1485	24280	GDB3390

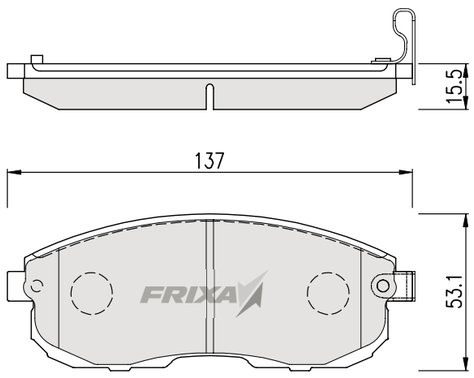

FPE018 — TOYOTA

PART NUMBER	**04465-26420**
REPRESENTATIVE MODEL	HIACE REGIUS
INTERCHANGEABLE	(03.08~07.08)

PO	SP	HP	FMSI	WVA	TRW
REAR (PAD)	SP1376	HP9155	D1434-8552	24680	

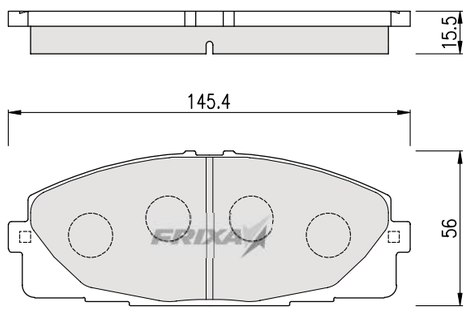

FPE019 — TOYOTA

PART NUMBER	**04465-30340**
REPRESENTATIVE MODEL	CAMRY / VISTA
INTERCHANGEABLE	ACA31,ACV31,MCV30(01.08~06.01) ACV35,ACV30(01.09~06.01)

PO	SP	HP	FMSI	WVA	TRW
FRONT (PAD)	SP2037	HP5053	D908-7787	23806	GDB3314

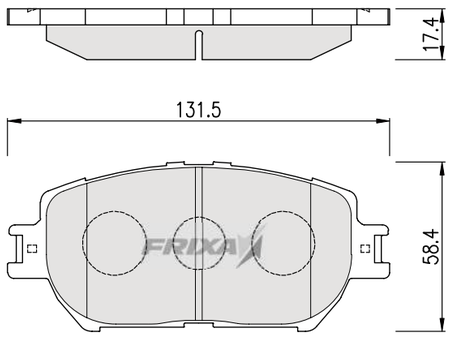

FPE020 — TOYOTA

PART NUMBER	**04465-13030**
REPRESENTATIVE MODEL	CROWN
INTERCHANGEABLE	GRS180,GRS182(03.12~)GS171,GS171W,JZS171,JZS171W, JZS175,JZS175W(99.09~03.12)

PO	SP	HP	FMSI	WVA	TRW
FRONT (PAD)	SP1272	HP5201	D817-7691	23526	GDB7230

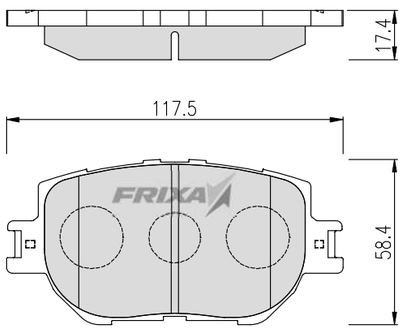

FPE021 — HONDA

PART NUMBER	**45022-S0A-J20**
REPRESENTATIVE MODEL	ODYSSEY
INTERCHANGEABLE	RA6,RA7(99.12~03.10), RB1,RB2(03.10~08.10) RA8,RA9(00.01~03.10)

PO	SP	HP	FMSI	WVA	TRW
FRONT (PAD)	SP2012	HP5085	D959-7857	23722	GDB3268

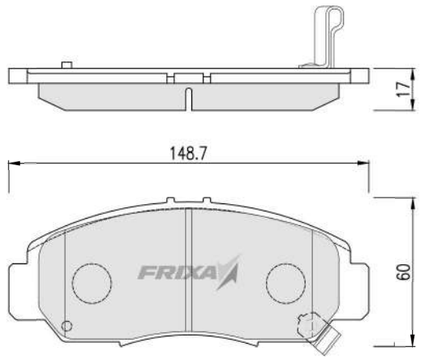

FPE022 — TOYOTA

PART NUMBER	**04465-48100**
REPRESENTATIVE MODEL	HARRIER
INTERCHANGEABLE	ACU30W,ACU35W(03.02~06.01), MCU30W,MCU35W,MCU31W,MCU36W(03.02~06.06)

PO	SP	HP	FMSI	WVA	TRW
FRONT (PAD)	SP1456	HP5166	D1005-7906	23734	GDB3338

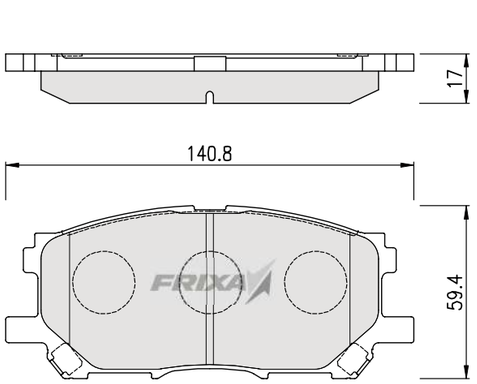

FPE023 — PEUGEOT

PART NUMBER	**425055**
REPRESENTATIVE MODEL	405
INTERCHANGEABLE	

PO	SP	HP	FMSI	WVA	TRW
FRONT (PAD)	SP1180	HP5055	D454-7334	21208	GDB793

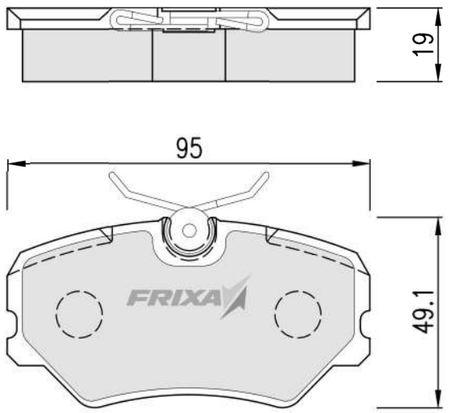

FPE024 — PEUGEOT

PART NUMBER	**4252.12**
REPRESENTATIVE MODEL	206 1.4
INTERCHANGEABLE	

PO	SP	HP	FMSI	WVA	TRW
FRONT (PAD)	SP1179	HP5047	D1143-8254	23597	GDB1361

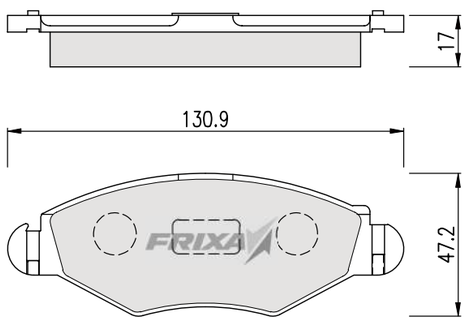

FPE024N — PEUGEOT

PART NUMBER	**4252.18**
REPRESENTATIVE MODEL	206 1.6
INTERCHANGEABLE	

PO	SP	HP	FMSI	WVA	TRW
FRONT (PAD)	SP1241	HP5272	D1213-8333	23599	GDB1463

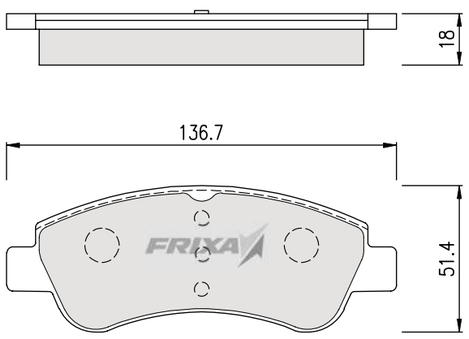

FPE024NR — PEUGEOT

PART NUMBER	**4250.42**
REPRESENTATIVE MODEL	206 1.6
INTERCHANGEABLE	

PO	SP	HP	FMSI	WVA	TRW
REAR (PAD)	SP1242	HP5287	D1458-8658	20973	GDB1305

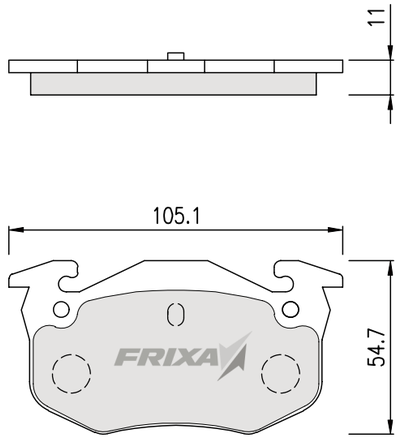

FPE025 — NISSAN

PART NUMBER	**41060-HA025**
REPRESENTATIVE MODEL	VANETTE
INTERCHANGEABLE	SK82LN(MN,TN,VN)(99.06~04.03), SK82LN(TN,VN),SKF2LN(MN,TN,VN)(04.03~)

PO	SP	HP	FMSI	WVA	TRW
FRONT (PAD)	SP2075	HP8264	D867-7742	23288	GDB3246

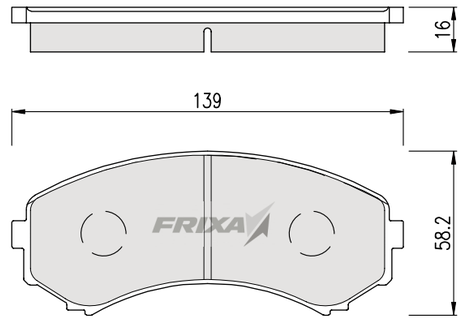

FPE026 — DAIHATSU

PART NUMBER	**04491-87506-000**
REPRESENTATIVE MODEL	HIJET
INTERCHANGEABLE	S100C,S110C,S100P,S110P(94.01~98.12)

PO	SP	HP	FMSI	WVA	TRW
REAR (PAD)					GDB7022

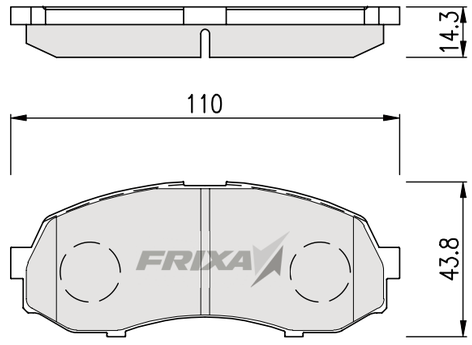

FPE027 — SUBARU

PART NUMBER	**26296-TC001**
REPRESENTATIVE MODEL	SAMBAR
INTERCHANGEABLE	TT1,TT2,TV1,TV2,TW1,TW2(99.01~04.08)

PO	SP	HP	FMSI	WVA	TRW
FRONT (PAD)		HP9306			

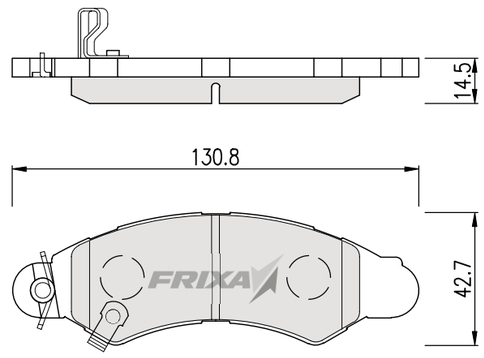

FPE028 — HONDA

PART NUMBER	**45022-S2K-000**
REPRESENTATIVE MODEL	LIFE
INTERCHANGEABLE	JA4(97.05~98.10), JB1,JB2(98.10~03.09), JB5,JB6(03.09~)

PO	SP	HP	FMSI	WVA	TRW
FRONT (PAD)	SP1609				GDB7089

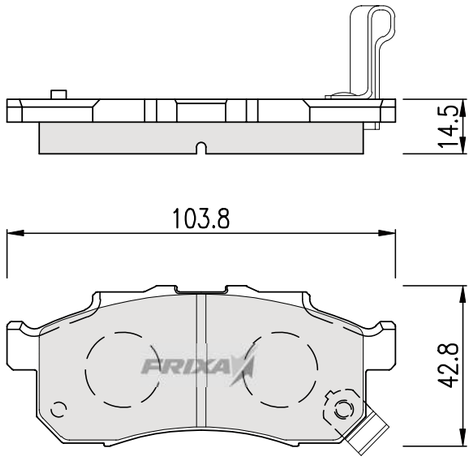

FPE029 — SUZUKI

PART NUMBER	**26296-KG000**
REPRESENTATIVE MODEL	ALTO
INTERCHANGEABLE	HA12S,HA12V(98.10~00.12), HA22S(98.10~02.04) HA23S(00.12~04.09), HA23V(00.12~05.01)

PO	SP	HP	FMSI	WVA	TRW
FRONT (PAD)	SP1592		D1225-8344	24423	

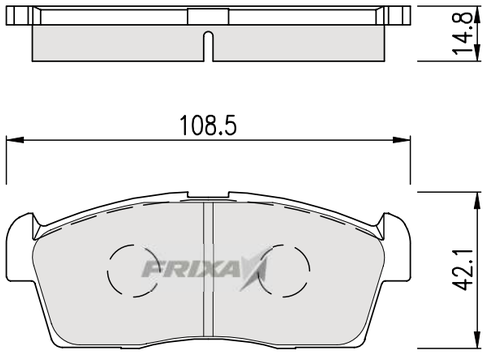

FPE030 — HONDA

PART NUMBER	**06450-S0A-J00**
REPRESENTATIVE MODEL	ACCORD
INTERCHANGEABLE	CE7(96.01~98.12), CC7,CE8(93.01~98.12) CF4,CF5(97.08~02.10), CL3(00.06~02.10)

PO	SP	HP	FMSI	WVA	TRW
FRONT (PAD)	SP1076-F	HP5009	D503-7382	21651	GDB3177

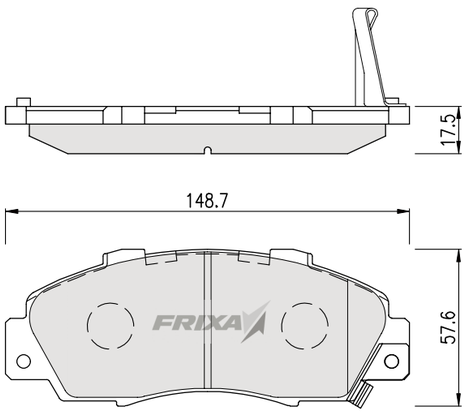

FPE031 — ISUZU

PART NUMBER	**8-97078409**
REPRESENTATIVE MODEL	ELF
INTERCHANGEABLE	NKR69,WKR69(93.07~99.04), NHR69,NHS69,NKR(99.05~02.05) NHR69M,NHR69E,NHR69MA,NHR69(02.06~04.05)

PO	SP	HP	FMSI	WVA	TRW
FRONT (PAD)					GDB7087

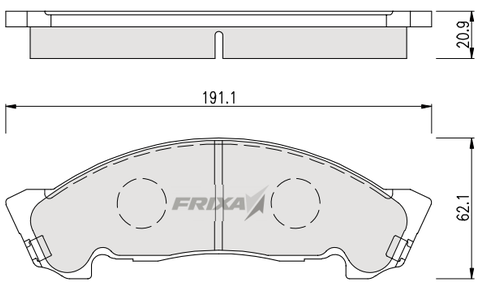

FPE035 — HONDA

PART NUMBER	**06430-S0A-J00**
REPRESENTATIVE MODEL	ODYSSEY
INTERCHANGEABLE	RA1,RA2(94.09~97.09), RA3,RA4(97.07~99.12) RA5(97.10~00.01), RA6,RA7(99.12~03.10)

PO	SP	HP	FMSI	WVA	TRW
REAR (PAD)	SP1076R	HP5164	D536-7418	23652	GDB774

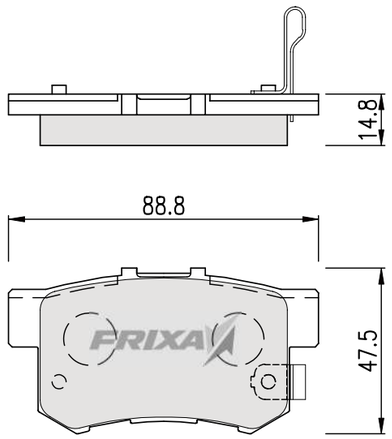

FPE036 — SUZUKI

PART NUMBER	**55810-60FA0**
REPRESENTATIVE MODEL	WAGON R
INTERCHANGEABLE	CT21S,CV21S(95.10~98.10), CT51S,CV51S(97.04~98.10)

PO	SP	HP	FMSI	WVA	TRW
FRONT (PAD)					GDB7125

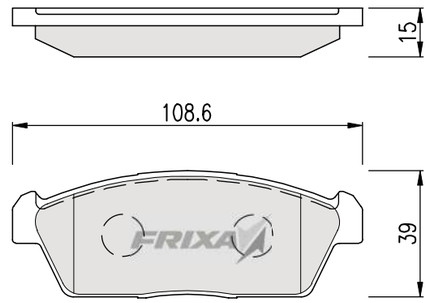

FPE037 — TOYOTA

PART NUMBER	**04465-52190**
REPRESENTATIVE MODEL	VITZ
INTERCHANGEABLE	NCP91(05.02~)

PO	SP	HP	FMSI	WVA	TRW
FRONT (PAD)	SP1588		D1628-8845	24708	GDB3460

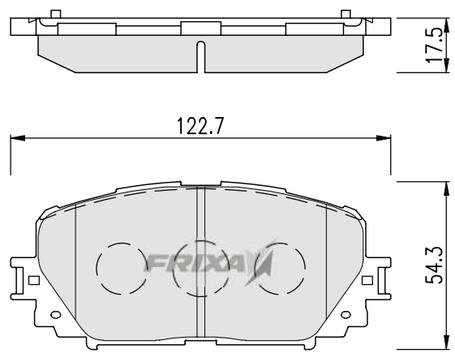

FPE038 — NISSAN

PART NUMBER	**41060-EA025**
REPRESENTATIVE MODEL	SERENA
INTERCHANGEABLE	C25,NC23(05.05~06.06), CC25,CNC25(06.06~) C25(05.05~)

PO	SP	HP	FMSI	WVA	TRW
FRONT (PAD)	SP1460A	HP5173	8200-D1094	24227	GDB3404

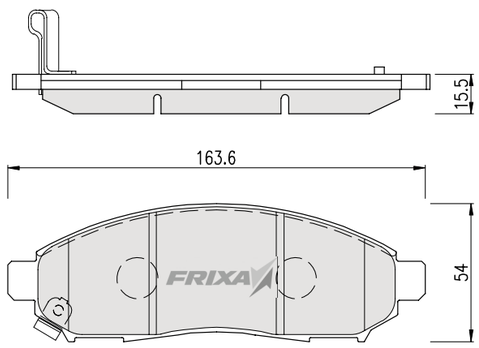

FOREIGN VEHICLES (PAD)

FPE039 — TOYOTA

PART NUMBER	**04466-12130**
REPRESENTATIVE MODEL	VITZ
INTERCHANGEABLE	NCP91(05.02~)

PO	SP	HP	FMSI	WVA	TRW
REAR (PAD)	SP2094	HP5181	D1354-8463	24610	GDB3454

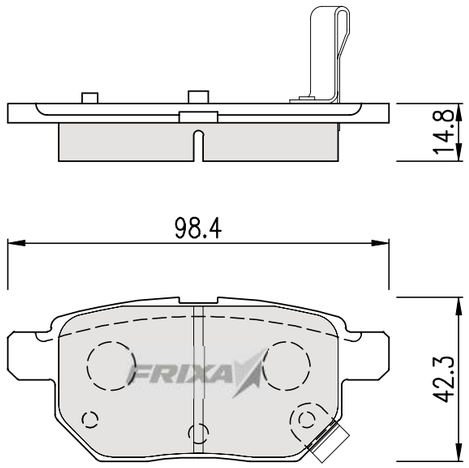

FPE040 — HONDA

PART NUMBER	**06430-SFE-J00**
REPRESENTATIVE MODEL	STEP WAGON
INTERCHANGEABLE	RG1,RG2,RG3,RG4(05.05~)

PO	SP	HP	FMSI	WVA	TRW
REAR (PAD)	SP2104			25545	GDB7697

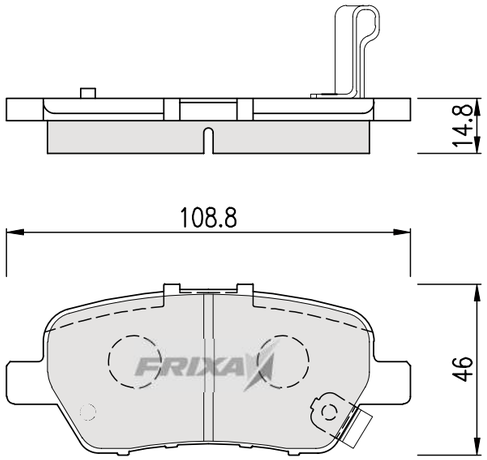

FPE041 — MITSUBISHI

PART NUMBER	**04491-87401**
REPRESENTATIVE MODEL	LANCER
INTERCHANGEABLE	C61A,C62V,C74A,C64A(98.09~91.10) C11V,C12V,C12W,C72A,C32V,C14V,C14W,C34V,C34

PO	SP	HP	FMSI	WVA	TRW
FRONT (PAD)	SP1142	HP5013	D535-7417	21650	GDB1129

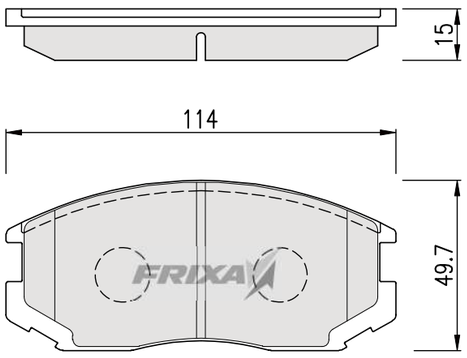

FPE042 — MITSUBISHI

PART NUMBER	**MN102878**
REPRESENTATIVE MODEL	LANCER
INTERCHANGEABLE	

PO	SP	HP	FMSI	WVA	TRW
FRONT (PAD)	SP1255	HP5183	D904-7782	24291	

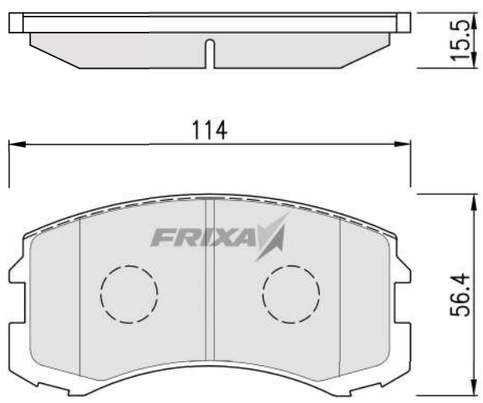

FPE043 — TOYOTA

PART NUMBER	**04465-0D020**
REPRESENTATIVE MODEL	COROLLA
INTERCHANGEABLE	NZE120,NZE121,NZE121G,NZE124,NZE124G,ZZE122(G),124(G), ZZE122(00.08~06.01)

PO	SP	HP	FMSI	WVA	TRW
FRONT (PAD)	SP1232	HP5019	D990-7695	23904	GDB3317

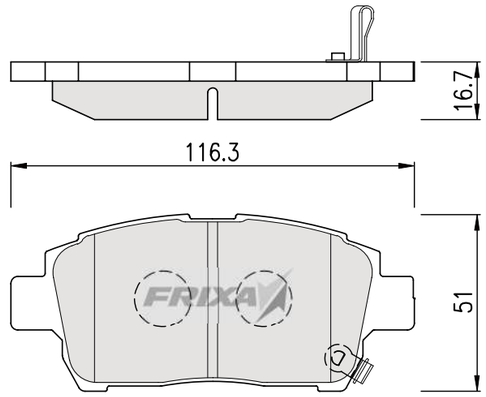

FPE047 — SUZUKI

PART NUMBER	**55810-68H00**
REPRESENTATIVE MODEL	CERVO
INTERCHANGEABLE	HG21S(06.11~)

PO	SP	HP	FMSI	WVA	TRW
FRONT (PAD)	SP1548				

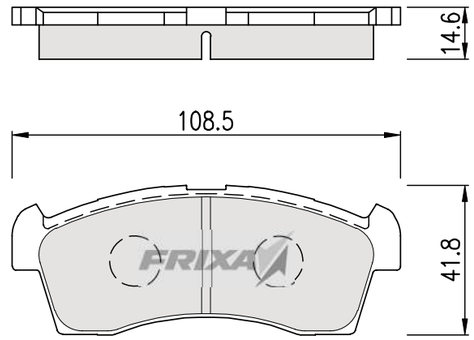

FPE048 — TOYOTA

PART NUMBER	**04465-02070**
REPRESENTATIVE MODEL	COROLLA
INTERCHANGEABLE	CBA-ZZE122(04.02~06.01), ZZE120(02.06~)

PO	SP	HP	FMSI	WVA	TRW
FRONT (PAD)	SP1373	HP5097	D923-7824	23836	GDB3315

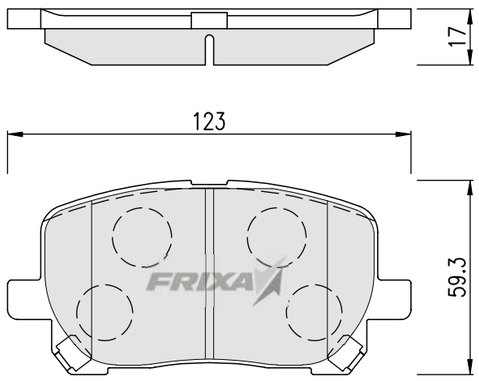

FPE053 — HONDA

PART NUMBER	**45022-SFC-000**
REPRESENTATIVE MODEL	LIFE
INTERCHANGEABLE	

PO	SP	HP	FMSI		TRW
FRONT (PAD)					

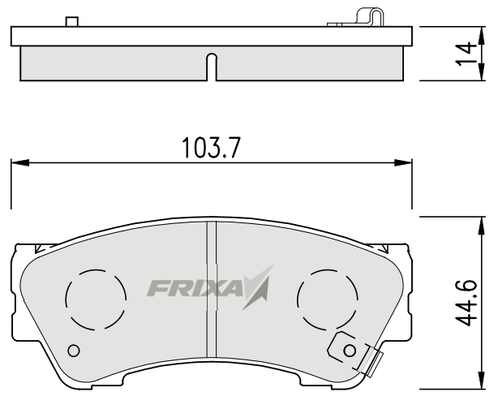

FOREIGN VEHICLES (PAD)

FPE057 — HONDA

PART NUMBER	**45022-S04-000**
REPRESENTATIVE MODEL	CIVIC
INTERCHANGEABLE	CAPA HATCHBACK, CIVIC COUPE, CIVIC PRO, CR-X DOMANI, FIT ARIA, INTEGRA, LOGO, ORTHIA, CITY SEDAN

PO	SP	HP	FMSI	WVA	TRW
FRONT (PAD)	SP2032	HP5040	D1643-8870	21697	GDB1164

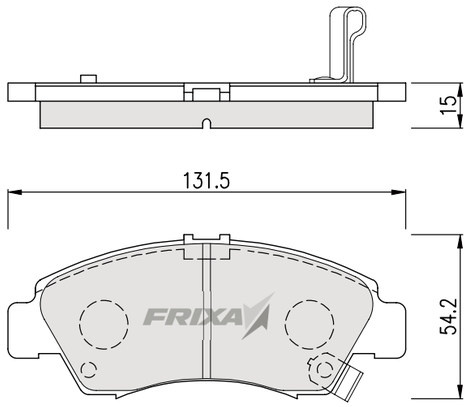

FPE058 — TOYOTA

PART NUMBER	**04465-12010**
REPRESENTATIVE MODEL	COROLLA
INTERCHANGEABLE	CAMRY

PO	SP	HP	FMSI	WVA	TRW
FRONT (PAD)	SP1105	HP5020	7152-D241	20870	GDB3184

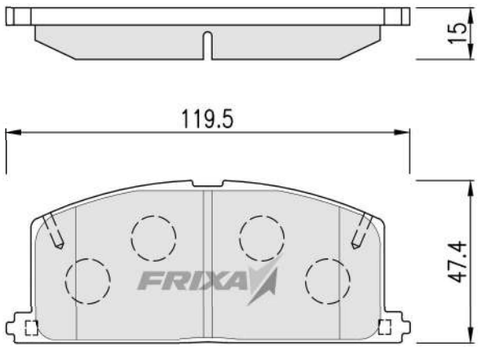

FPE060 — TOYOTA

PART NUMBER	**04465-02220**
REPRESENTATIVE MODEL	COROLLA 2009
INTERCHANGEABLE	NZE141(06.01~08.01), NZE141G(06.01~), ZRE142(G),144(G)(06.01~)

PO	SP	HP	FMSI	WVA	TRW
FRONT (PAD)	SP2093	HP5176	D1210-8330	24336	GDB3425

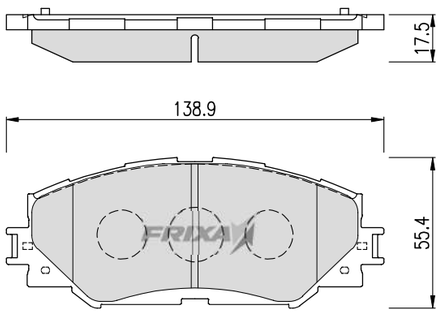

FPE062 — SUZUKI

PART NUMBER	**55200-61832**
REPRESENTATIVE MODEL	CULTUS
INTERCHANGEABLE	AA44S,AB44S(88.09~98.06) AB34S,AF34S,AA34S,AB34S(88.09~00.05)

PO	SP	HP	FMSI	WVA	TRW
FRONT (PAD)				21730	GDB3237

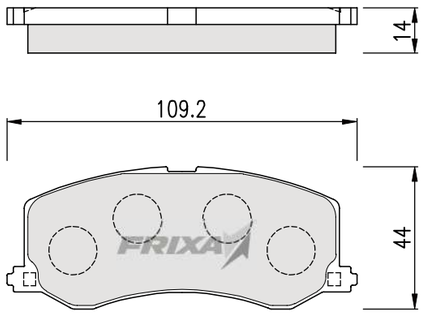

FPE064 — TOYOTA

PART NUMBER	**04466-20090**
REPRESENTATIVE MODEL	COROLLA REAR
INTERCHANGEABLE	ZZE120(02.01~06.10), ZZE121,CDE120(01.11~) ZZE122,123(G)(00.08~06.01), ZRE142, 144(06.10~)

PO	SP	HP	FMSI	WVA	TRW
REAR (PAD)	SP2044	HP5153	D823-7696	23521	GDB3243

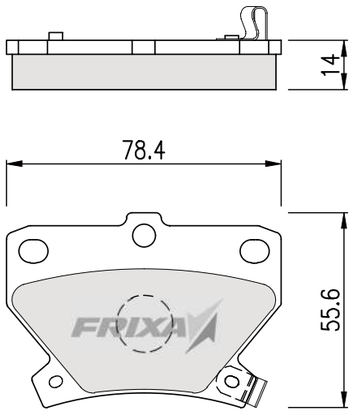

FPE079 — NISSAN

PART NUMBER	**41060-50Y90**
REPRESENTATIVE MODEL	SUNNY(1992-1995)
INTERCHANGEABLE	100NX, AD VAN, MARCH, PRESEA, PULSAR

PO	SP	HP	FMSI	WVA	TRW
FRONT (PAD)	SP1489	HP5067	D510-7389	21657	GDB1012

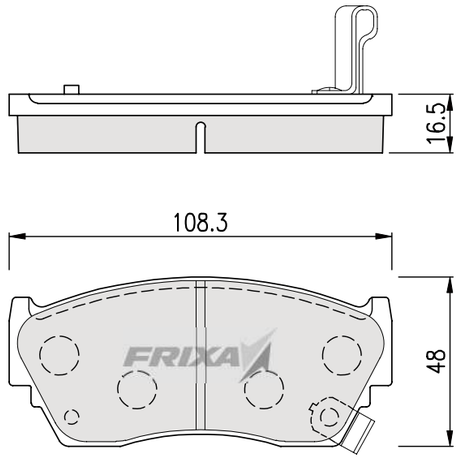

FPE080 — NISSAN

PART NUMBER	**41060-0M890**
REPRESENTATIVE MODEL	SUNNY(1996-2000)
INTERCHANGEABLE	ALMERA, CUBE, HYPER MINI, PRESEA, PULSAR, RASHEEN, WINGROAD

PO	SP	HP	FMSI	WVA	TRW
FRONT (PAD)	SP1122	HP5014	D668-7546	23796	GDB3156

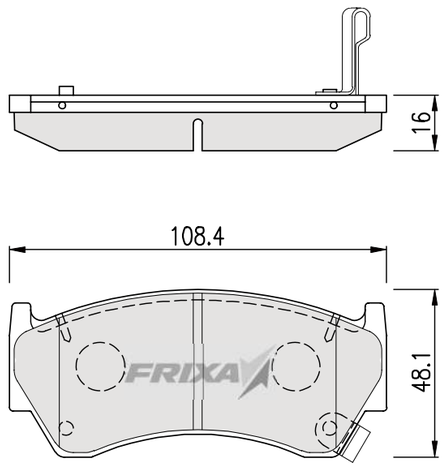

FPE082 — HONDA

PART NUMBER	**45022-SA3-G10**
REPRESENTATIVE MODEL	CIVIC(1995-2000)
INTERCHANGEABLE	

PO	SP	HP	FMSI	WVA	TRW
FRONT (PAD)	SP1427	HP5056	D474-7355	21330	GDB764

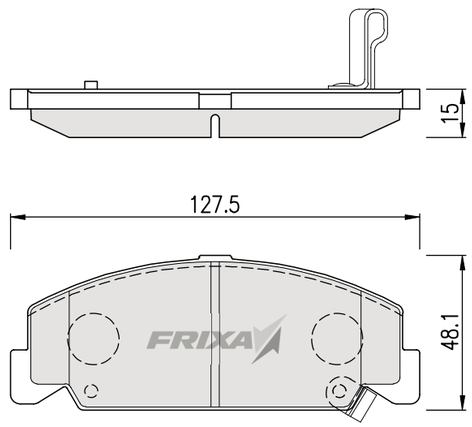

FOREIGN VEHICLES (PAD)

FPE083 — HONDA

PART NUMBER	**06450-S5A-J00**
REPRESENTATIVE MODEL	CIVIC(2001-2006)
INTERCHANGEABLE	DOMANI, EDIX, FREED, INTEGRA, MOBILIO, STREAM

PO	SP	HP	FMSI	WVA	TRW
FRONT (PAD)	SP1221	HP5039	D621-7497	21694	GDB1183

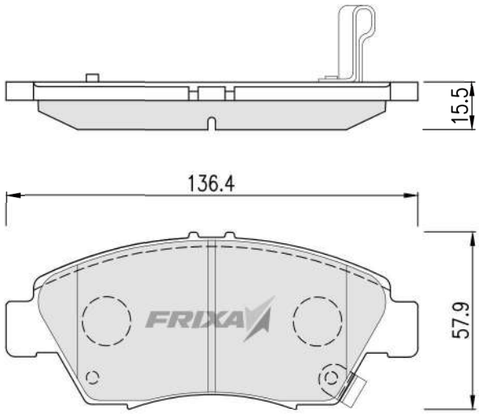

FPE084 — HONDA

PART NUMBER	**06450-S9A-010**
REPRESENTATIVE MODEL	CIVIC(2007-)
INTERCHANGEABLE	ACCORD IV

PO	SP	HP	FMSI	WVA	TRW
FRONT (PAD)	SP1109	HP5041	D465-7345	21497	GDB894

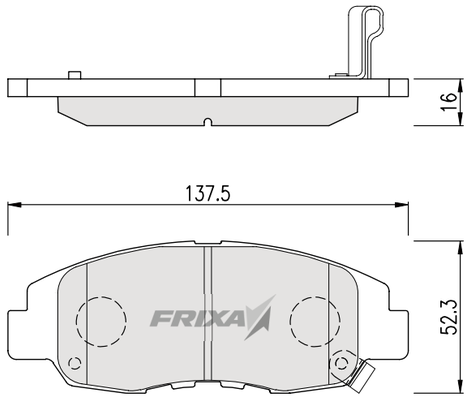

FPE087 — TOYOTA

PART NUMBER	**04465-02160**
REPRESENTATIVE MODEL	COROLLA 09MY(Fr)
INTERCHANGEABLE	(07.01~)

PO	SP	HP	FMSI	WVA	TRW
FRONT (PAD)	SP1500	HP5182	D1571-8780	24121	GDB3481

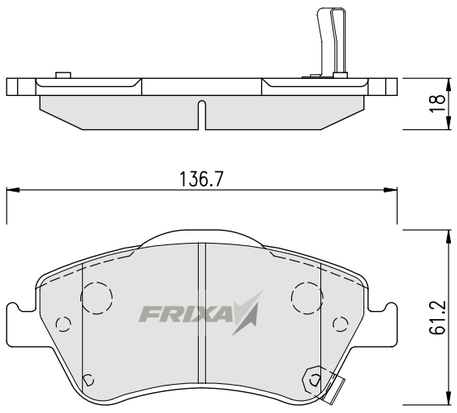

FPE088 — TOYOTA

PART NUMBER	**04466-02170**
REPRESENTATIVE MODEL	COROLLA 09MY(Fr)
INTERCHANGEABLE	(07.01~)

PO	SP	HP	FMSI	WVA	TRW
REAR (PAD)	SP1501		D1501-8781	24664	GDB3480

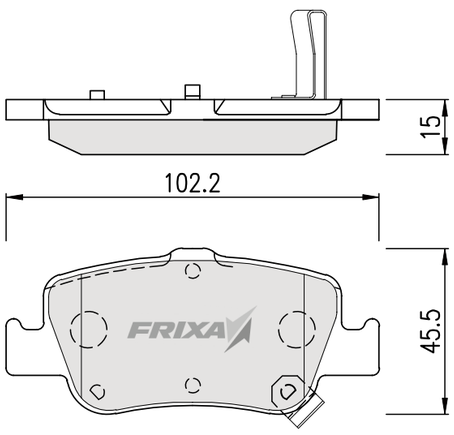

FPE089 — TOYOTA

PART NUMBER	**04466-05010**
REPRESENTATIVE MODEL	AVENSIS
INTERCHANGEABLE	ZZT250,ZZT251(03.03~08.01) CDT250,AZT250,AZT255,AZT250W,

PO	SP	HP	FMSI	WVA	TRW
REAR (PAD)	SP2184		D2067-9299	23620	GDB3456

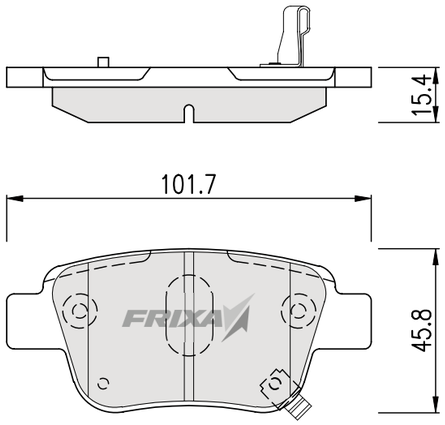

FPE090 — TOYOTA

PART NUMBER	**04465-52230**
REPRESENTATIVE MODEL	COROLLA
INTERCHANGEABLE	NZE120,NZE121,NZE121G,NZE124,NZE124G,ZZE122(G),124(G), ZZE122(00.08~06.01), ZZE120(01.11~02.07)

PO	SP	HP	FMSI	WVA	TRW
FRONT (PAD)	SP1555 (C TYPE)		D1249-8367	25316	

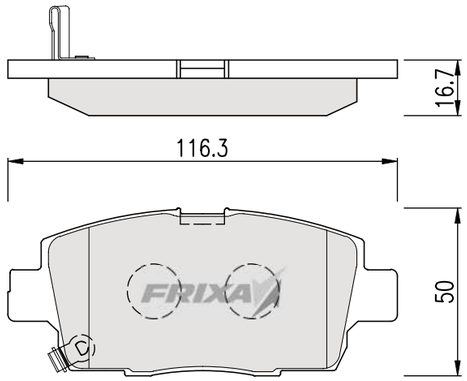

FPE091 — TOYOTA

PART NUMBER	**04465-28520**
REPRESENTATIVE MODEL	ALPHARD
INTERCHANGEABLE	ANH20W,25W,GGH20W,25W(08.05~)

PO	SP	HP	FMSI	WVA	TRW
FRONT (PAD)	SP2183		D1524-8732	24601	GDB7733

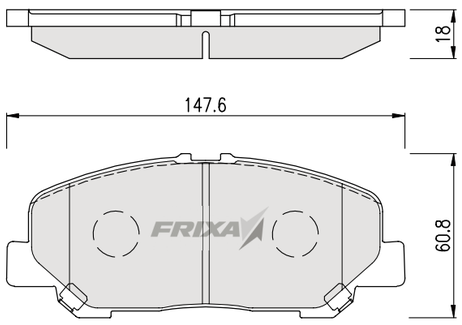

FPE092 — SUZUKI

PART NUMBER	**55810-57K00**
REPRESENTATIVE MODEL	SWIFT
INTERCHANGEABLE	ZC71S(07.05~), ZC11S,ZC21S,ZD11S,ZD21S(04.11~) ZC31S(05.09~)

PO	SP	HP	FMSI	WVA	TRW
FRONT (PAD)	SP2086		D1614-8827	23962	GDB3522

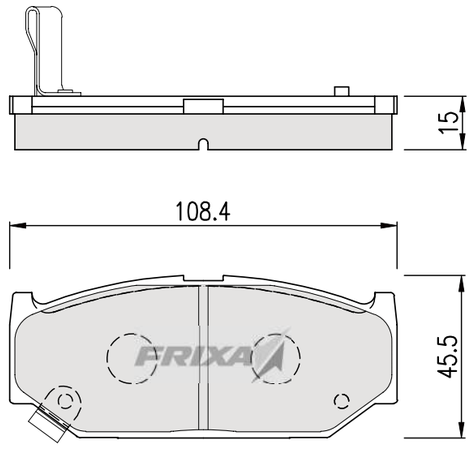

FOREIGN VEHICLES (PAD)

FPE096 — SUZUKI

PART NUMBER	**55110-80000**
REPRESENTATIVE MODEL	JIMNY
INTERCHANGEABLE	SJ30(84.07~87.12), JA71C,JA71V(86.01~90.03) JA11C,JA11V(90.03~95.10)

PO	SP	HP	FMSI	WVA	TRW
FRONT (PAD)	SP1540	HP8448	7540-D660	21142	GDB3210

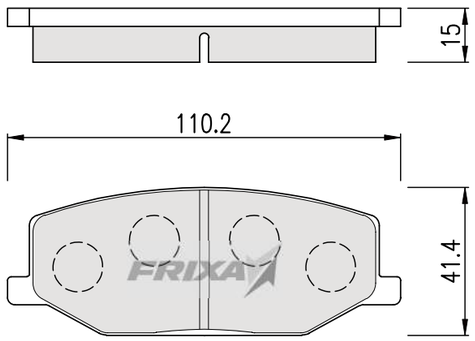

FPE097 — TOYOTA

PART NUMBER	**04466-28010**
REPRESENTATIVE MODEL	ESTIMA
INTERCHANGEABLE	CXR10G,11G,20G,21G,TCR20G(W),21W(93.08~95.01) CXR11G,CXR21G(94.05~96.08)

PO	SP	HP	FMSI	WVA	TRW
REAR (PAD)	SP2036	HP5124	D501-7381	21688	GDB1138

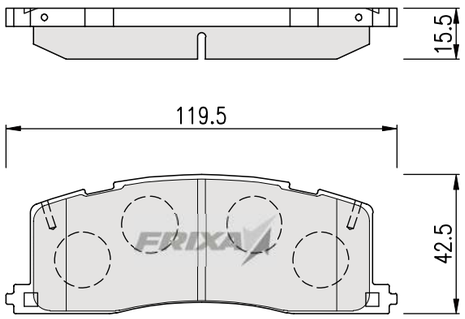

FPE098 — SUBARU

PART NUMBER	**25296-FA041**
REPRESENTATIVE MODEL	IMPREZA
INTERCHANGEABLE	GF8,GC8(96.09~00.07), G11GD, GC(01.03~02.10)

PO	SP	HP	FMSI	WVA	TRW
FRONT (PAD)	SP1225	HP5044	7589-D721	21915	GDB3217

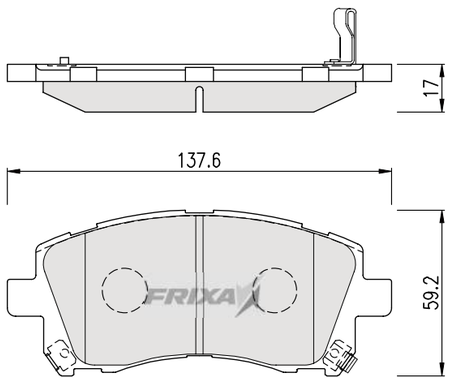

FPE099 — DAIHATSU

PART NUMBER	**04465-B1010**
REPRESENTATIVE MODEL	MIRA
INTERCHANGEABLE	L275S,L285S(06.12~), L250S,L260S(02.12~07.10)

PO	SP	HP	FMSI	WVA	TRW
FRONT (PAD)	SP1550			25262	GDB3430

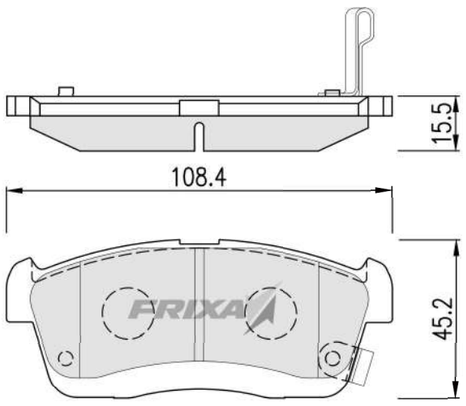

FPE100 — RENAULT

PART NUMBER	**410602192R**
REPRESENTATIVE MODEL	LOGAN
INTERCHANGEABLE	CLIO, MEGANE

PO	SP	HP	FMSI	WVA	TRW
FRONT (PAD)	SP1243	HP5197	D1146-8256	21404	GDB1332

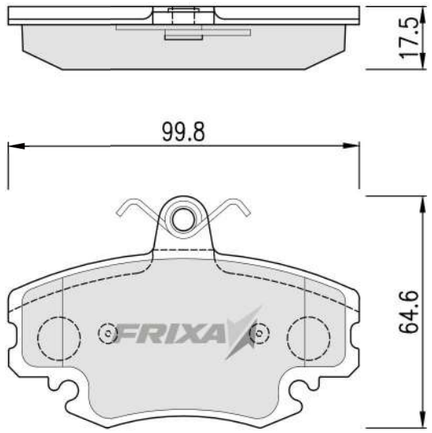

FPE101 — FORD

PART NUMBER	**1 223 682**
REPRESENTATIVE MODEL	FOCUS II
INTERCHANGEABLE	

PO	SP	HP	FMSI	WVA	TRW
FRONT (PAD)	SP1260	HP5143	7947-D1230	23723	GDB1583

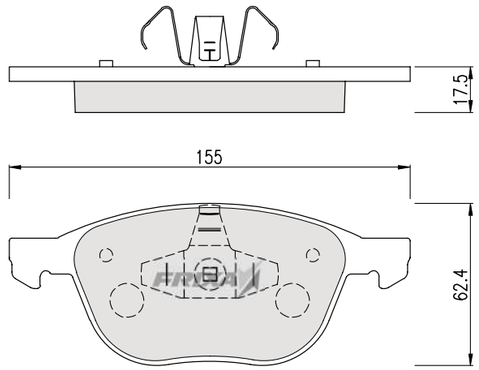

FPE102 — FORD

PART NUMBER	**1 360 306**
REPRESENTATIVE MODEL	FOCUS II
INTERCHANGEABLE	

PO	SP	HP	FMSI	WVA	TRW
REAR (PAD)	SP2091	HP5142	D1931-9155	23482	GDB1621

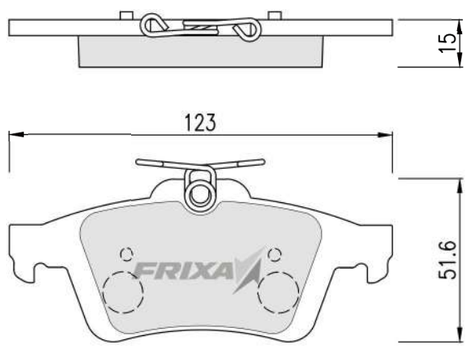

FPE103 — LADA

PART NUMBER	**2108-3501089**
REPRESENTATIVE MODEL	VAZ 2108
INTERCHANGEABLE	CEVARO(90.~93.) SAMARA (VAZ 2108/2109)(86.~96.) SAMARA FORMA / DIVA / SAGONA (VAZ 21099)(88.~97.)

PO	SP	HP	FMSI	WVA	TRW
FRONT (PAD)	SP1165			20789	GDB469

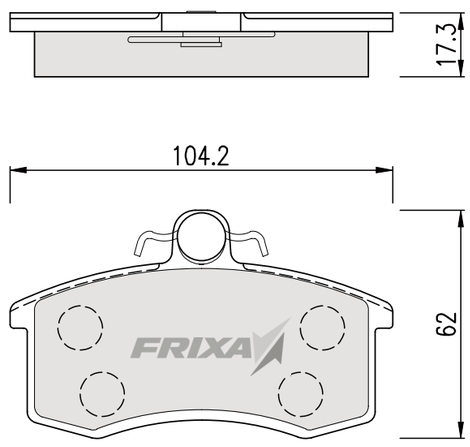

FOREIGN VEHICLES (PAD)

FPE104 — LADA

PART NUMBER	**2108-3501080**
REPRESENTATIVE MODEL	VAZ 2110
INTERCHANGEABLE	110 (VAZ 2110)(96.~00.)111 (VAZ 2111)(96.~) NOVA - KALINA (VAZ 2105/2107)(94.~00.)

PO	SP	HP	FMSI	WVA	TRW
FRONT (PAD)	SP1181			23670	GDB1446

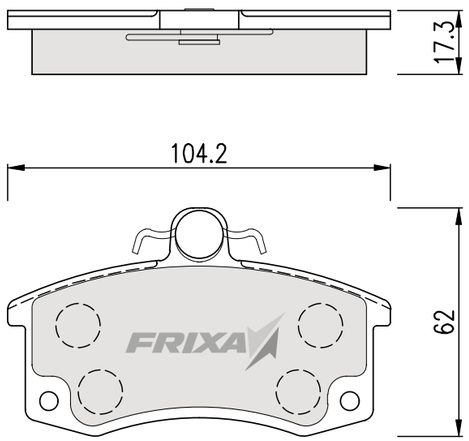

FPE105 — LADA

PART NUMBER	**2121-3501090**
REPRESENTATIVE MODEL	NIVA 2121
INTERCHANGEABLE	COSSACK(78.~96.) NIVA (VAZ 2121)1.6/1.7i(76.~00.) NIVA (VAZ 2121)1.9D/1.9D JR,LX(88.~93.) TAIGA(77.~00.)

PO	SP	HP	FMSI	WVA	TRW
FRONT (PAD)	SP1168			20660	GDB265

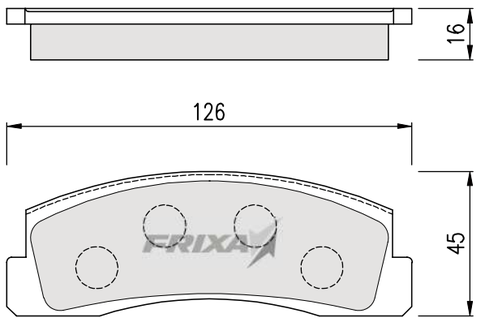

FPE110 — AUDI

PART NUMBER	**1A0698451E**
REPRESENTATIVE MODEL	A4
INTERCHANGEABLE	A3, A6

PO	SP	HP	FMSI	WVA	TRW
REAR (PAD)	SP2029	HP8343	D340-7234	20261	GDB1330

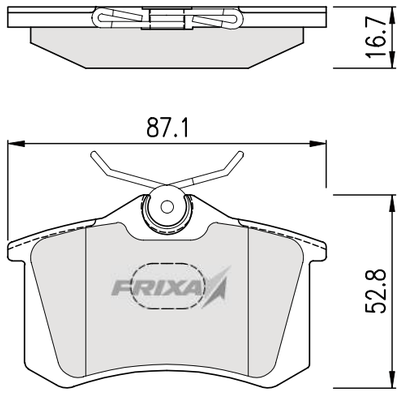

FPE111 — CHERY

PART NUMBER	**A133501080**
REPRESENTATIVE MODEL	CHERY, A3, A5
INTERCHANGEABLE	

PO	SP	HP	FMSI	WVA	TRW
FRONT (PAD)	SP2134	HP5137			

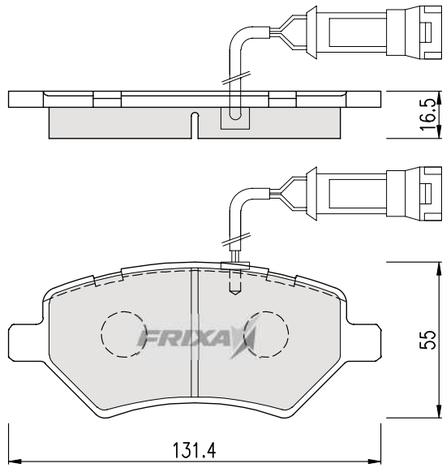

FPE108 — MERCEDES-BENZ

PART NUMBER	**0004217391**
REPRESENTATIVE MODEL	SPRINTER
INTERCHANGEABLE	SPRINTER (904)(96.~03.)

PO	SP	HP	FMSI	WVA	TRW
FRONT/REAR (PAD)	SP1277		D949-7848	29076	GDB1288

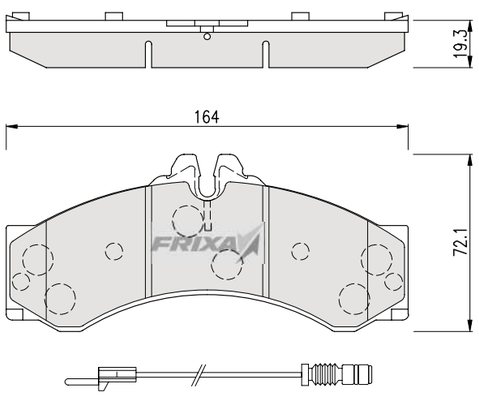

FPE109 — AUDI

PART NUMBER	**4B0698151E**
REPRESENTATIVE MODEL	A4
INTERCHANGEABLE	JA4(97.05~98.10), JB1,JB2(98.10~03.09), JB5,JB6(03.09~)

PO	SP	HP	FMSI	WVA	TRW
FRONT (PAD)	SP2001	HP5253	D840-7711	20676	GDB1307

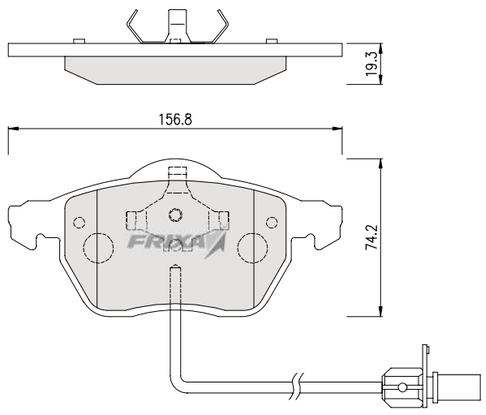

FPE113 — TOYOTA

PART NUMBER	**04466-60060**
REPRESENTATIVE MODEL	LAND CRUISER PRADO
INTERCHANGEABLE	HI-LUX(EURO)

PO	SP	HP	FMSI	WVA	TRW
REAR (PAD)	SP2040	HP5037	D606-7487	21947	GDB3464

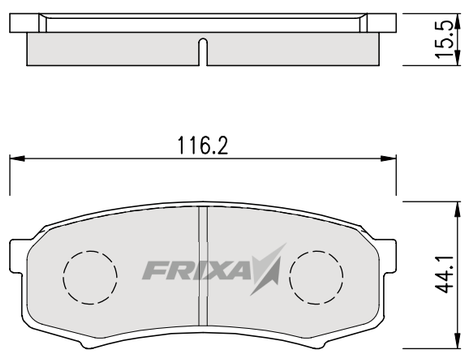

FPE114 — TOYOTA

PART NUMBER	**04465-YZZ57**
REPRESENTATIVE MODEL	HILUX 4*4
INTERCHANGEABLE	HI-LUX(EURO) LAND CRUISER/LAND CRUISER PRADO

PO	SP	HP	FMSI	WVA	TRW
FRONT (PAD)	SP1222	HP5036	D436-7298	21679	GDB797

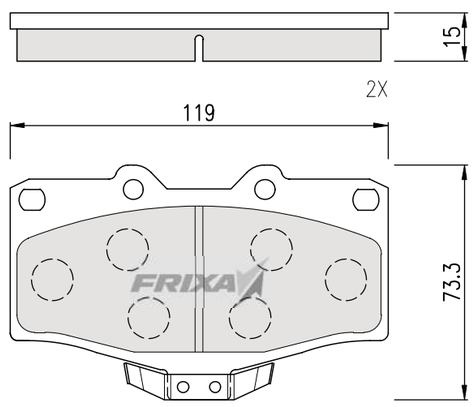

FOREIGN VEHICLES (PAD)

FPE115 — TOYOTA

PART NUMBER	**04465-YZZ56**
REPRESENTATIVE MODEL	HIACE 90-98
INTERCHANGEABLE	DYNA/TOYOACE,HI-LUX SURF(PICKUP),HI-LUX(EURO) QUICK DELIVERY QUICK DELIVERY

PO	SP	HP	FMSI	WVA	TRW
FRONT (PAD)	SP1121	HP5011	D438-7205	21158	GDB7045

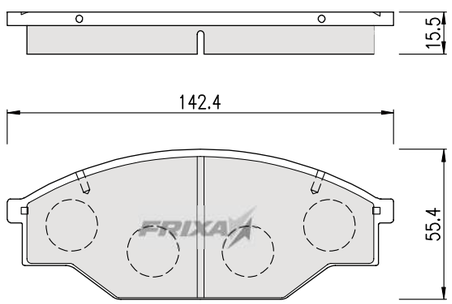

FPE116 — DAIHATSU

PART NUMBER	**04465-B2040**
REPRESENTATIVE MODEL	MEERA 05MY
INTERCHANGEABLE	CHARADE, CUORE VII, CUORE VIII, TREVIS

PO	SP	HP	FMSI	WVA	TRW
FRONT (PAD)	SP1611		D1731-8956	24229	GDB7114

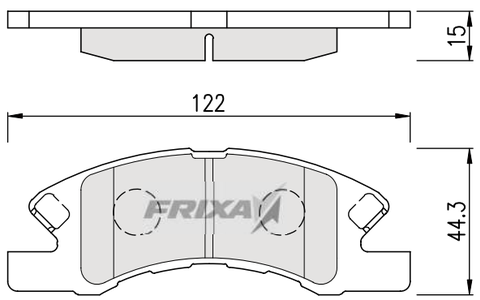

FPE117 — TOYOTA

PART NUMBER	**04465-60190**
REPRESENTATIVE MODEL	HDZ100 LAND CRIUSER FRONT
INTERCHANGEABLE	

PO	SP	HP	FMSI	WVA	TRW
FRONT (PAD)	SP1379	HP5084	D772-7639	23524	GDB3197

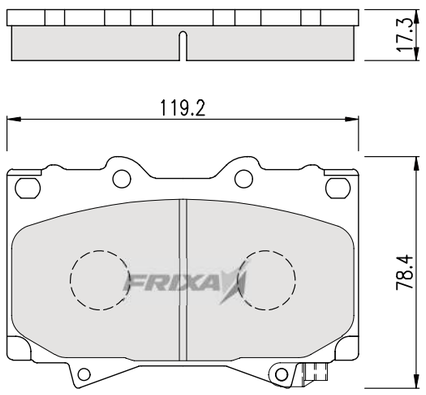

FPE118 — TOYOTA

PART NUMBER	**04466-60070**
REPRESENTATIVE MODEL	HDZ100 LAND CRIUSER REAR
INTERCHANGEABLE	

PO	SP	HP	FMSI	WVA	TRW
REAR (PAD)	SP1380	HP5199	D773-7640	23539	

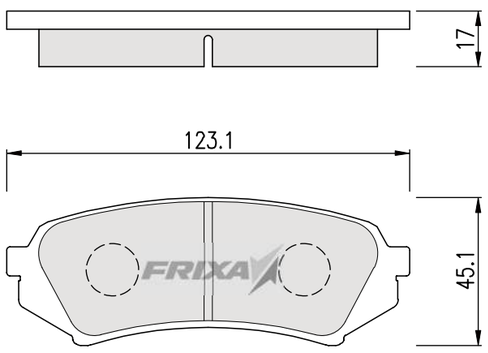

FPE119 — DAIHATSU

PART NUMBER	**04491-87228**
REPRESENTATIVE MODEL	CUORE NEW
INTERCHANGEABLE	DOMINO, LEEZA, MIRA, MOVE, OPTI, PERODUA NIPPA

PO	SP	HP	FMSI	WVA	TRW
FRONT (PAD)		HP9761		21968	GDB3126

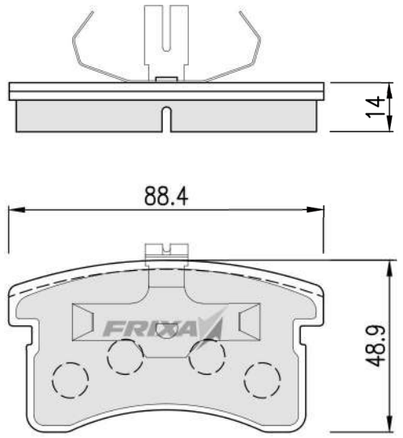

FPE122 — SUZUKI

PART NUMBER	**55200-82860**
REPRESENTATIVE MODEL	SWIFT
INTERCHANGEABLE	CULTUS

PO	SP	HP	FMSI	WVA	TRW
FRONT (PAD)		HP8443	D296-7197	21252	GDB382

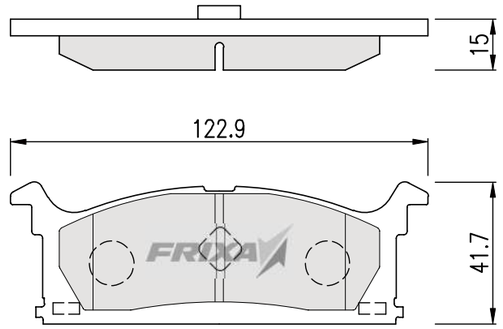

FPE123 — MAZDA

PART NUMBER	**DFY13328ZA**
REPRESENTATIVE MODEL	MAZDA2
INTERCHANGEABLE	DEMIO, DEMIO3

PO	SP	HP	FMSI	WVA	TRW
FRONT (PAD)	SP2113		D1454-8653	24283	GDB3437

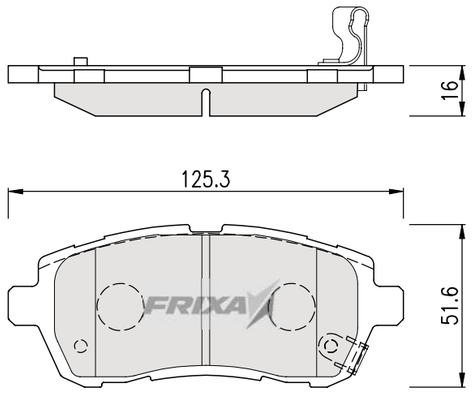

FPE124 — MITSUBISHI

PART NUMBER	**4605A261**
REPRESENTATIVE MODEL	LANCER
INTERCHANGEABLE	LEGNUM,OUTLANDER,SPACE RUNNER,ASX,RVR AIRTREK,CHARIOT,DELICA,DION,ECLIPSE

PO	SP	HP	FMSI	WVA	TRW
FRONT (PAD)	SP1360	HP5158	D866-8338	23584	GDB3287

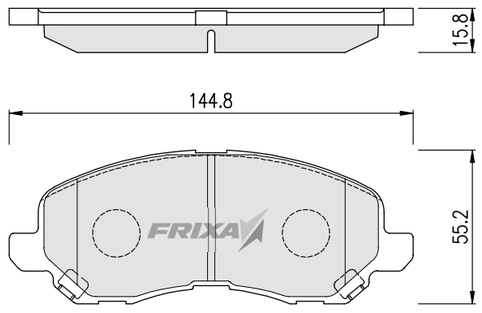

FOREIGN VEHICLES (PAD)

FPE125 — SUBARU

PART NUMBER	**26296AE200**
REPRESENTATIVE MODEL	IMPREZA
INTERCHANGEABLE	IMPREZA, LEGACY

PO	SP	HP	FMSI	WVA	TRW
FRONT (PAD)	SP1629		D1999-9229	24372	GDB3469

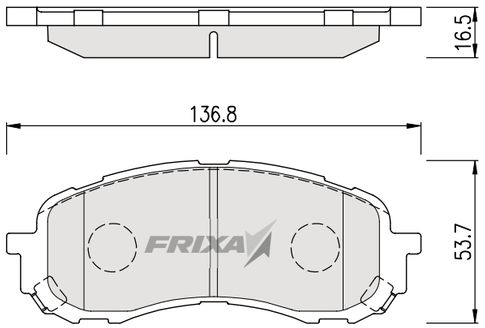

FPE126 — SUZUKI

PART NUMBER	**5581054G51**
REPRESENTATIVE MODEL	LIANA
INTERCHANGEABLE	

PO	SP	HP	FMSI	WVA	TRW
FRONT (PAD)	SP1541	HP8153	D1195-8315	23817	GDB3290

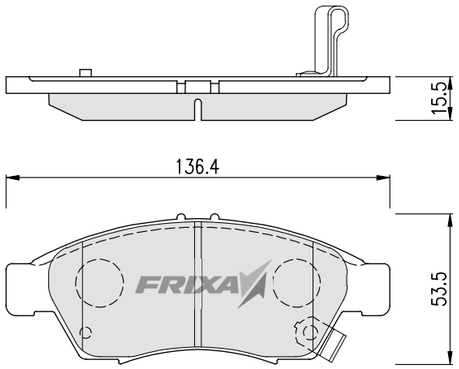

FPE127 — SUZUKI

PART NUMBER	**5581062J00**
REPRESENTATIVE MODEL	SWIFT
INTERCHANGEABLE	SPLASH

PO	SP	HP	FMSI	WVA	TRW
FRONT (PAD)	SP1564		D1435-8553	23973	GDB3396

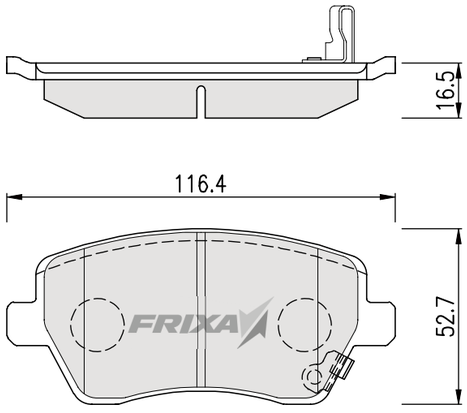

FPE128 — TOYOTA

PART NUMBER	**04465-0K160**
REPRESENTATIVE MODEL	PICK UP
INTERCHANGEABLE	HI-LUX PICK UP(07.~) HI-LUX VIGO INNOVA/KIJANG

PO	SP	HP	FMSI	WVA	TRW
FRONT (PAD)	SP1276	HP5266	D1710-8934	24567	GDB3500

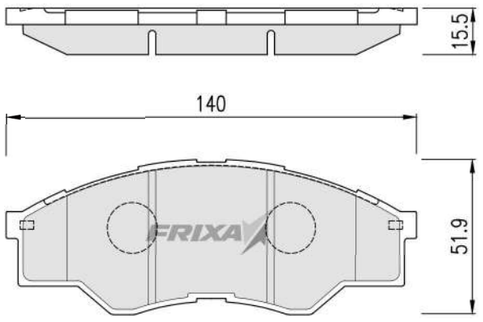

FPE129 — NISSAN

PART NUMBER	**41060-AX085**
REPRESENTATIVE MODEL	TIIDA
INTERCHANGEABLE	AD EXPERT,BLUEBIRD/SYLPHY,CUBE,LATIO,MARCH MICRA,NOTE,VERSA,WINGROAD

PO	SP	HP	FMSI	WVA	TRW
FRONT (PAD)	SP1383	HP5267	D1345-8456	24682	GDB7743

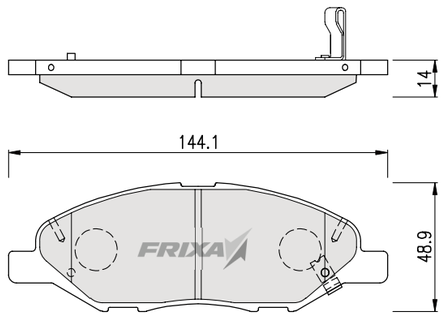

FPE130 — TOYOTA

PART NUMBER	**04465-52180**
REPRESENTATIVE MODEL	YARIS
INTERCHANGEABLE	YARIS(07.~), BELTA, COROLLA, AXIO, PREMIO, ALLION, PRIUS IV ,VIOS,VITZ, ALTIS

PO	SP	HP	FMSI	WVA	TRW
FRONT (PAD)	SP1377		D1184-8538	24347	GDB7706

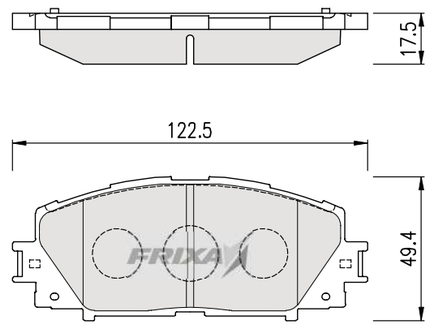

FPE131 — TOYOTA

PART NUMBER	**04465-0K290**
REPRESENTATIVE MODEL	PICK UP
INTERCHANGEABLE	HI-LUX VIGO, INNOVA/KIJANG

PO	SP	HP	FMSI	WVA	TRW
FRONT (PAD)	SP1544	HP5276	D1523-8731	23416	GDB3532

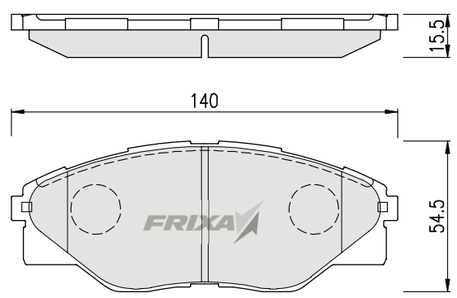

FPE132 — TOYOTA

PART NUMBER	**04465-04030**
REPRESENTATIVE MODEL	PICK UP
INTERCHANGEABLE	HI-LUX 4X4(05.~) HI-LUX PICKUP(02.~06.) HI-LUX VIGO FORTUNER TACOMA TACOMA STOUT

PO	SP	HP	FMSI	WVA	TRW
FRONT (PAD)	SP1375	HP5200	D799-7671	21680	GDB3428

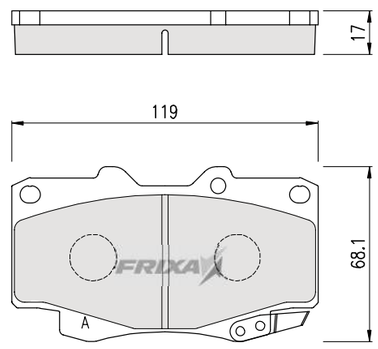

FOREIGN VEHICLES (PAD)

FPE133 — TOYOTA

PART NUMBER	**04465-28400**
REPRESENTATIVE MODEL	ESTIMA
INTERCHANGEABLE	ESTIMA / HYBRID(99.12-03.04) PREVIA

PO	SP	HP	FMSI	WVA	TRW
FRONT (PAD)	SP1591	HP8488	D1227-8346	24522	GDB3248

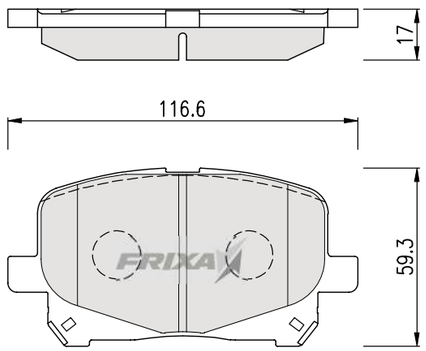

FPE134 — SUBARU

PART NUMBER	**26292-AE020**
REPRESENTATIVE MODEL	IMPREZA R
INTERCHANGEABLE	IMPREZA, LEGACY,OUTBACK,BAJA,FORESTER

PO	SP	HP	FMSI	WVA	TRW
REAR (PAD)	SP2120	HP5132	D770-7637	23572	GDB3223

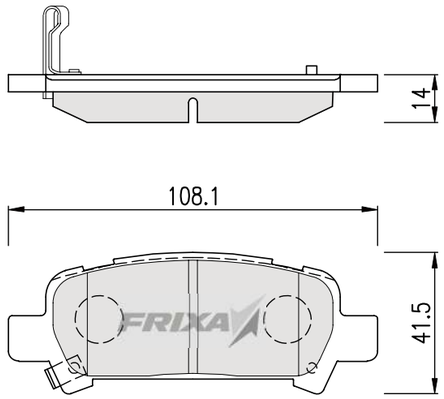

FPE135 — ISUZU

PART NUMBER	**8-97329266-0**
REPRESENTATIVE MODEL	ELF
INTERCHANGEABLE	COMMERICAL NPR SERIES

PO	SP	HP	FMSI	WVA	TRW
FRONT (PAD)	SP1667	HP8188	D825-7697	25800	GDB7233

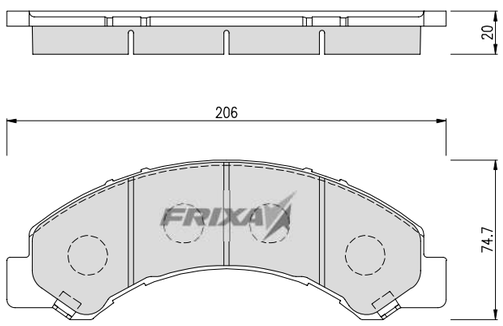

FPE136 — MITSUBISHI

PART NUMBER	**26696FG000**
REPRESENTATIVE MODEL	LANCER EVO
INTERCHANGEABLE	

PO	SP	HP	FMSI	WVA	TRW
REAR (PAD)	SP1495	HP5205	D961-7859	21580	GDB3350

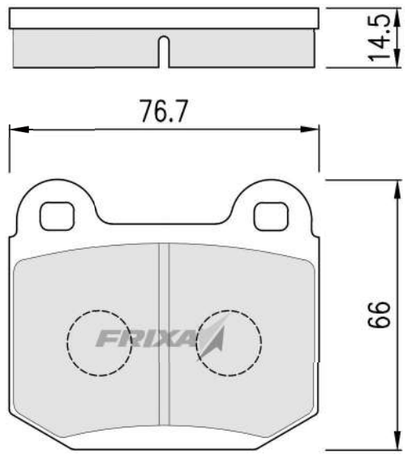

FPE137 — TOYOTA

PART NUMBER	**04465-0K240**
REPRESENTATIVE MODEL	HILUX VII 2009~
INTERCHANGEABLE	TACOMA

PO	SP	HP	FMSI	WVA	TRW
FRONT (PAD)	SP1484		D1567-8776	25209	GDB3534

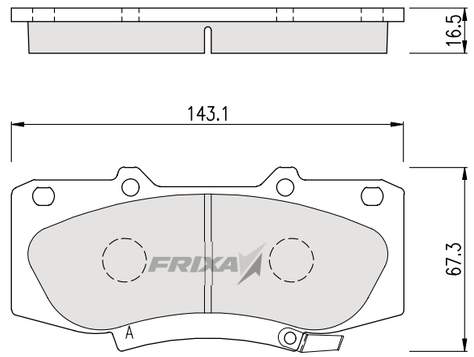

FPE138 — CHEVROLET

PART NUMBER	**19279792**
REPRESENTATIVE MODEL	SAIL
INTERCHANGEABLE	

PO	SP	HP	FMSI	WVA	TRW
FRONT (PAD)	SP2199	HP5274	D1661-8888		

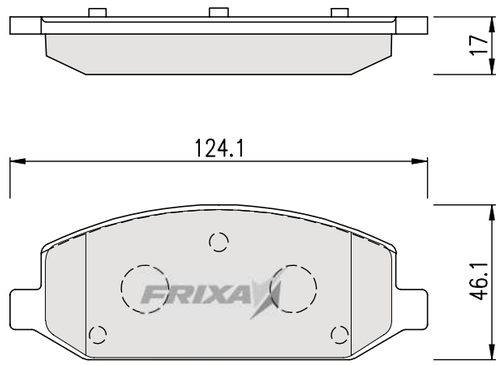

FPE139 — SUBARU

PART NUMBER	**26696AG031**
REPRESENTATIVE MODEL	LEGACY
INTERCHANGEABLE	

PO	SP	HP	FMSI	WVA	TRW
REAR (PAD)	SP2118	HP8433	D1114-8218	24271	GDB3373

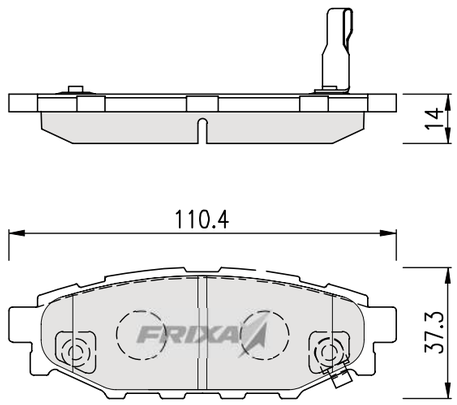

FPE142 — TOYOTA

PART NUMBER	**04465-33440**
REPRESENTATIVE MODEL	CAMRY V
INTERCHANGEABLE	AVALON,VISTA,AURION, DAIHATSU(ALTIS),TOYOTA(AURION)

PO	SP	HP	FMSI	WVA	TRW
FRONT (PAD)	SP2080		8331-D1222	24350	GDB3429

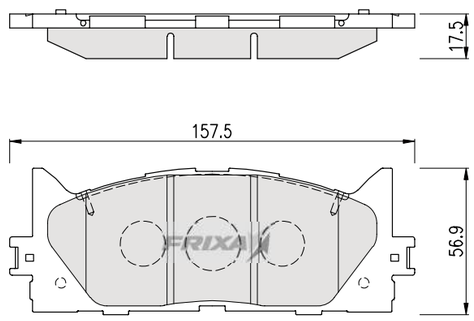

FOREIGN VEHICLES (PAD)

FPE143 — TOYOTA

PART NUMBER	**04466-33180**
REPRESENTATIVE MODEL	CAMRY
INTERCHANGEABLE	MARK X ZIO,RAV4,AURION VANGUARD,LEXUS(ES350)

PO	SP	HP	FMSI	WVA	TRW
REAR (PAD)	SP2081	HP5178	D1212-8332	24338	

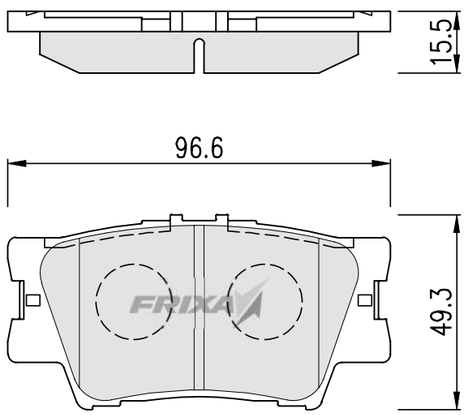

FPE144 — MERCEDES-BENZ

PART NUMBER	**A 005 420 62 20**
REPRESENTATIVE MODEL	C200
INTERCHANGEABLE	

PO	SP	HP	FMSI	WVA	TRW
FRONT (PAD)	SP2191	HP5191	D872-7747	23144	GDB1413

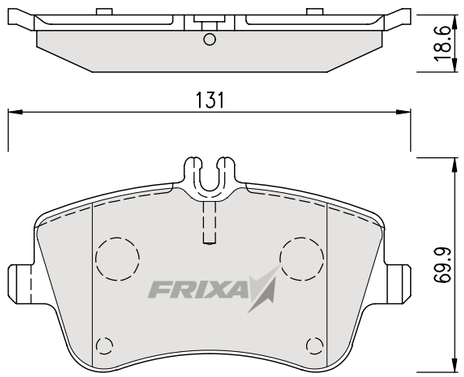

FPE145 — MERCEDES-BENZ

PART NUMBER	**003 420 06 20**
REPRESENTATIVE MODEL	C200
INTERCHANGEABLE	

PO	SP	HP	FMSI	WVA	TRW
REAR (PAD)	SP2192	HP5193	D848-7724	23078	GDB1455

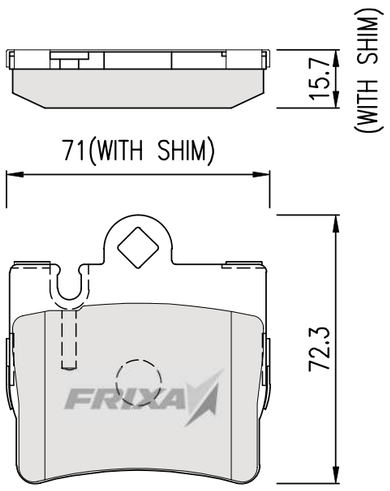

FPE149 — MITSUBISHI

PART NUMBER	**MB500812**
REPRESENTATIVE MODEL	PAJERO L300
INTERCHANGEABLE	MONTERO, STRADA

PO	SP	HP	FMSI	WVA	TRW
FRONT (PAD)	SP1135	HP5022	D349-7241	21373	GDB729

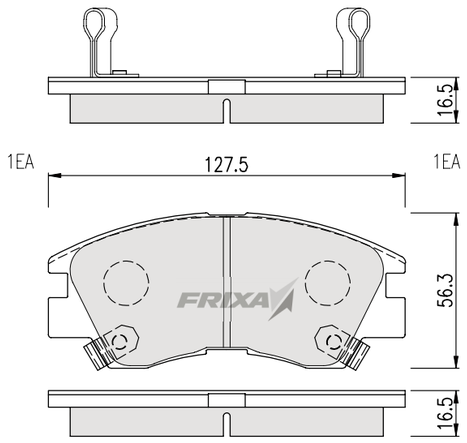

FPE151 — CITROEN

PART NUMBER	**4251.13**
REPRESENTATIVE MODEL	XANTIA
INTERCHANGEABLE	

PO	SP	HP	FMSI	WVA	TRW
FRONT (PAD)	SP1253	HP5100	D1485-8684	21632	GDB1102

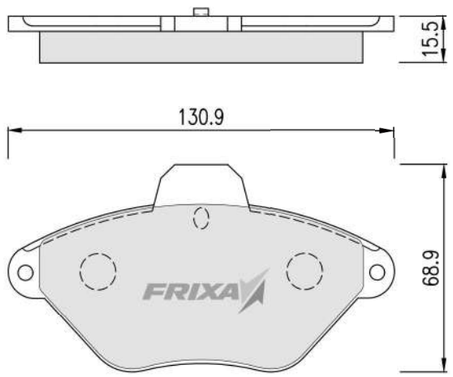

FPE152 — CITROEN

PART NUMBER	**4521.83**
REPRESENTATIVE MODEL	XANTIA
INTERCHANGEABLE	

PO	SP	HP	FMSI	WVA	TRW
REAR (PAD)	SP1254	HP5101	D1217-8337	20162	GDB1247

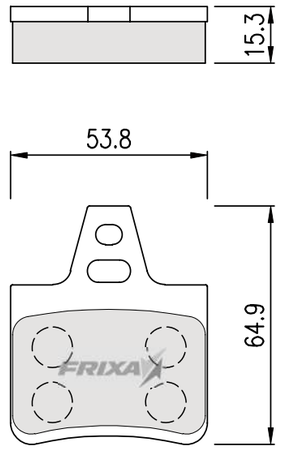

FPE156 — TOYOTA

PART NUMBER	**04465-02390**
REPRESENTATIVE MODEL	AURIS, COROLLA
INTERCHANGEABLE	

PO	SP	HP	FMSI	WVA	TRW
FRONT (PAD)	SP1700		D1964-9189	25698	GDB3598

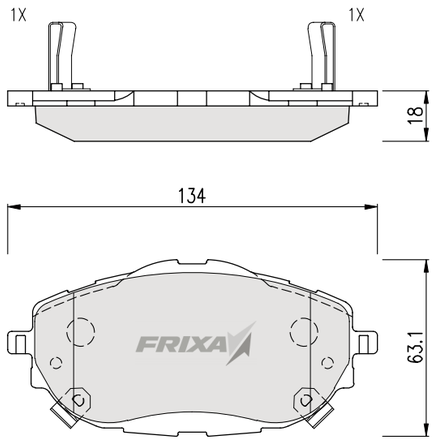

FPE157 — MAZDA

PART NUMBER	**BHY1-33-28ZA**
REPRESENTATIVE MODEL	MAZDA 3
INTERCHANGEABLE	MAZDA 3 SALOON, CX-3

PO	SP	HP	FMSI	WVA	TRW
FRONT (PAD)	SP1729		D1728-8952	25875	GDB3592

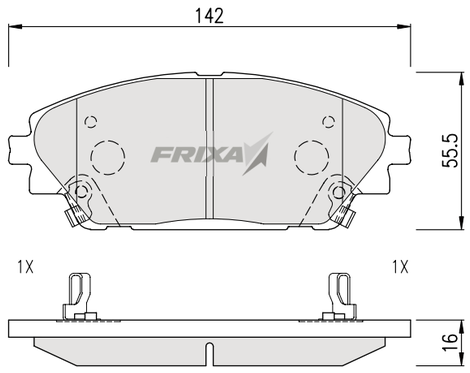

FOREIGN VEHICLES (PAD)

FPE158 — MAZDA

PART NUMBER	**G4YA-33-28ZA**
REPRESENTATIVE MODEL	MAZDA 6 SALOON
INTERCHANGEABLE	MAZDA6 SALOON, 6 ESTATE

PO	SP	HP	FMSI	WVA	TRW
FRONT (PAD)	SP1728		D1711-8936	25725	GDB3580

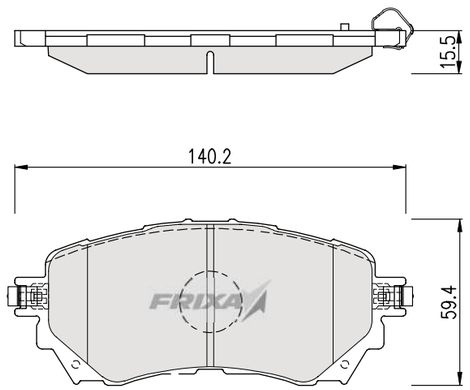

FPE159 — MAZDA

PART NUMBER	**B4Y0-26-48ZA**
REPRESENTATIVE MODEL	MAZDA 3 (BM) SKYAKTIV
INTERCHANGEABLE	MAZDA 3 SALOON (BM) SKYAKTIV

PO	SP	HP	FMSI	WVA	TRW
REAR (PAD)	SP1730		D1729-8953	25878	GDB3593

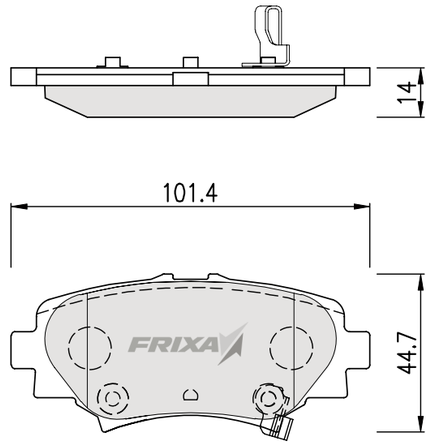

FPE160 — KHODRO

PART NUMBER	
REPRESENTATIVE MODEL	NEW SAMAND
INTERCHANGEABLE	

PO	SP	HP	FMSI	WVA	TRW
FRONT (PAD)	SP1418	HP5271			

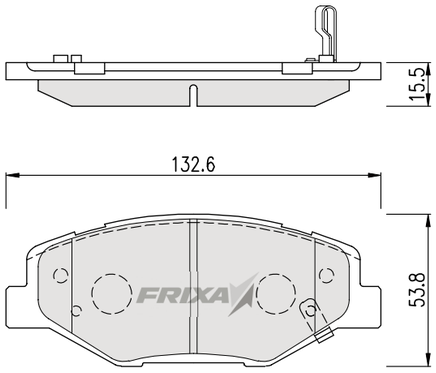

FPE161 — SUZUKI

PART NUMBER	**55200-65J00**
REPRESENTATIVE MODEL	VITARA
INTERCHANGEABLE	

PO	SP	HP	FMSI	WVA	TRW
FRONT (PAD)	SP1416	HP8447	D1188-8307	24346	GDB3443

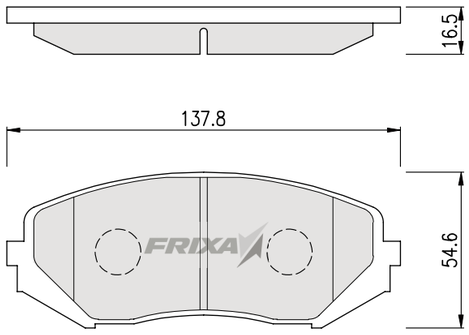

FPE162 — MAZDA

PART NUMBER	**BJYD-33-23Z**
REPRESENTATIVE MODEL	MAZDA 323, FORD
INTERCHANGEABLE	

PO	SP	HP	FMSI	WVA	TRW
FRONT (PAD)	SP1227	HP5016	D798-7670	23490	GDB3193

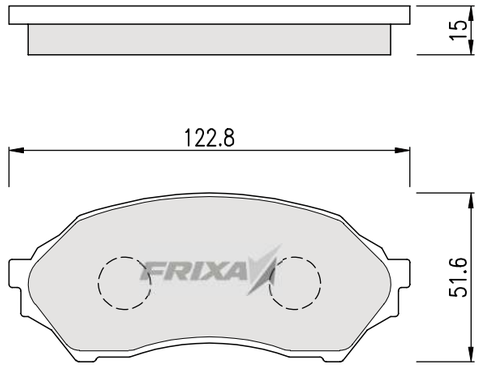

FPE163 — MAZDA

PART NUMBER	**04491-60020**
REPRESENTATIVE MODEL	MAZDA B-SERIES
INTERCHANGEABLE	

PO	SP	HP	FMSI	WVA	TRW
FRONT (PAD)	SP1417	HP8250	D239-7151	21243	GDB980

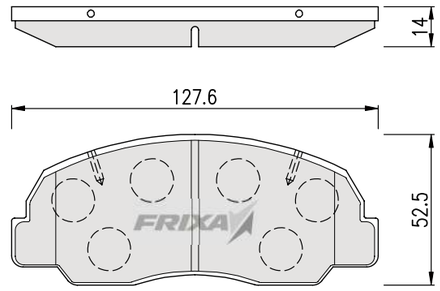

FPE164 — KHODRO

PART NUMBER	**5059479**
REPRESENTATIVE MODEL	PAYKAN
INTERCHANGEABLE	HILLMAN

PO	SP	HP	FMSI	WVA	TRW
FRONT (PAD)	SP1358				

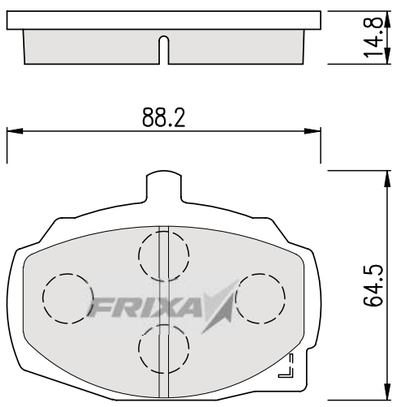

FPE165 — RENAULT

PART NUMBER	**41060-1237R**
REPRESENTATIVE MODEL	CLIO
INTERCHANGEABLE	RENAULTCLIO III, MEGANE II,SCENIC II

PO	SP	HP	FMSI	WVA	TRW
FRONT (PAD)	SP1414		D1542-8750	23215	GDB1687

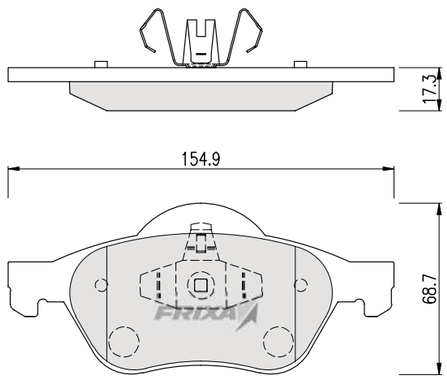

FOREIGN VEHICLES (PAD)

FPE166 — TOYOTA

PART NUMBER	**04465-35290**
REPRESENTATIVE MODEL	LAND CRUISER 2004
INTERCHANGEABLE	

PO	SP	HP	FMSI	WVA	TRW
FRONT (PAD)	SP2033	HP5098	D976-7875	24024	GDB3364

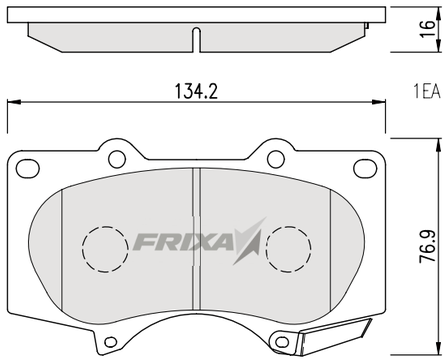

FPE167 — TOYOTA

PART NUMBER	**04465-52041**
REPRESENTATIVE MODEL	VITZ 99
INTERCHANGEABLE	YARIS

PO	SP	HP	FMSI	WVA	TRW
FRONT (PAD)	SP1230	HP5018	D831-7704	23348	GDB3218

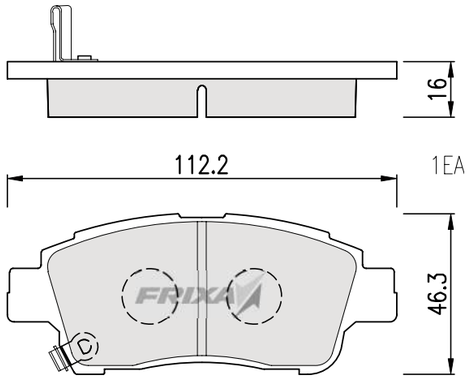

FPE168 — HONDA

PART NUMBER	**45022-SB0-505**
REPRESENTATIVE MODEL	CITY 96-2002
INTERCHANGEABLE	CIVIC IV, CIVIC V, JAZZ III, LOGO, PRELUDE II

PO	SP	HP	FMSI	WVA	TRW
FRONT (PAD)	SP1462	HP8166	D256-7162	20193	GDB325

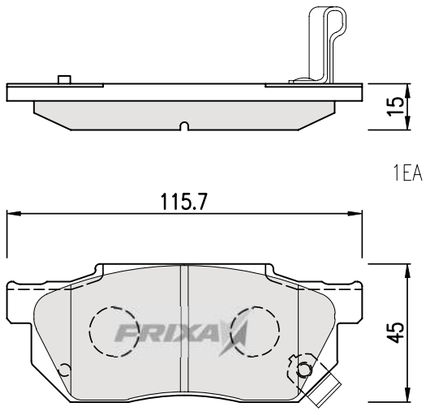

FPE169 — HONDA

PART NUMBER	**45022-SB2-780**
REPRESENTATIVE MODEL	ACCORD 86
INTERCHANGEABLE	INTEGRA, CRX I

PO	SP	HP	FMSI	WVA	TRW
FRONT (PAD)	SP1346	HP5059	D334-7229	20099	GDB784

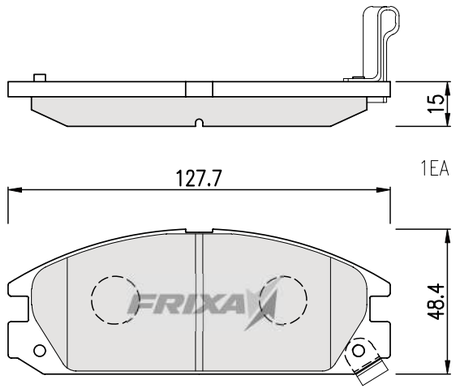

FPE170 — HONDA

PART NUMBER	**45022-TG0-T00**
REPRESENTATIVE MODEL	CITY 2009
INTERCHANGEABLE	CIVIC V, CIVIC VI, CIVIC VII, CRX III

PO	SP	HP	FMSI	WVA	TRW
FRONT (PAD)			D621-7998		GDB7855

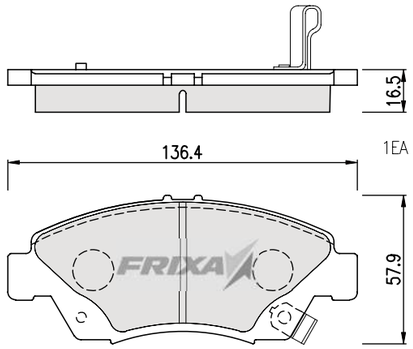

FPE173 — KHODRO

PART NUMBER	
REPRESENTATIVE MODEL	RUNNA
INTERCHANGEABLE	

PO	SP	HP	FMSI	WVA	TRW
FRONT (PAD)					

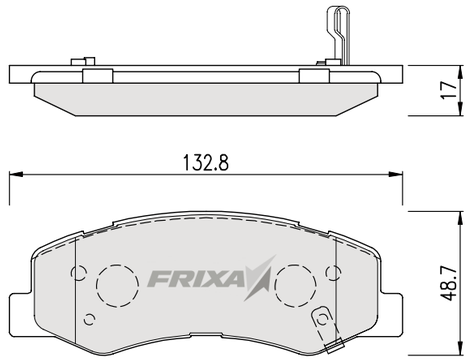

FPE174 — SAIPA

PART NUMBER	
REPRESENTATIVE MODEL	TIBA
INTERCHANGEABLE	

PO	SP	HP	FMSI	WVA	TRW
FRONT (PAD)	SP1722				

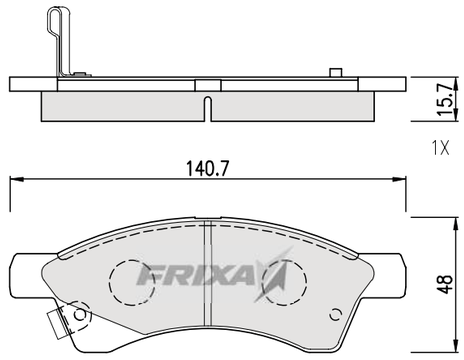

FPE175 — TOYOTA

PART NUMBER	**04465-06090**
REPRESENTATIVE MODEL	CAMRY
INTERCHANGEABLE	

PO	SP	HP	FMSI	WVA	TRW
FRONT (PAD)	SP1590		D1726-8950	25610	GDB3614

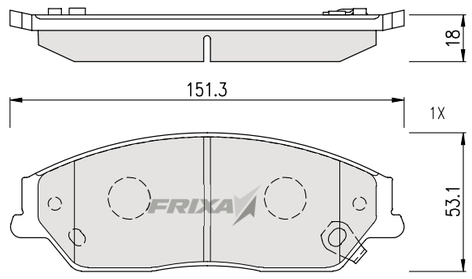

FOREIGN VEHICLES (PAD)

FPE176 — TOYOTA

PART NUMBER	**04466-06080**
REPRESENTATIVE MODEL	CAMRY
INTERCHANGEABLE	

PO	SP	HP	FMSI	WVA	TRW
REAR (PAD)	SP1236	HP5244	D1727-8951	25599	

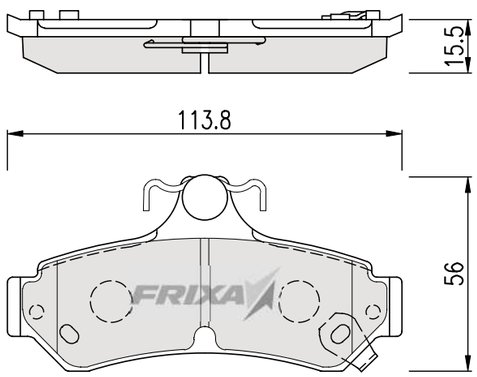

FPE178 — BMW

PART NUMBER	**34 11 2 283 865**
REPRESENTATIVE MODEL	528
INTERCHANGEABLE	1 COUPE, 3 COUPE, 5 SERIES

PO	SP	HP	FMSI	WVA	TRW
FRONT (PAD)	SP2210	HP5196	D918-7799	23311	GDB1498

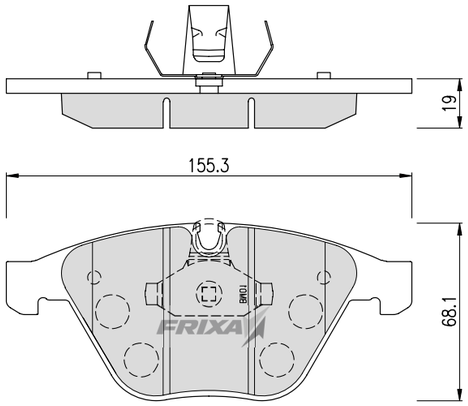

FPE179 — MERCEDES-BENZ

PART NUMBER	**000 142 99 20**
REPRESENTATIVE MODEL	BENZ E300
INTERCHANGEABLE	E CLASS

PO	SP	HP	FMSI	WVA	TRW
FRONT (PAD)	GP3906	HP5027	D423-7311	20940	GDB818

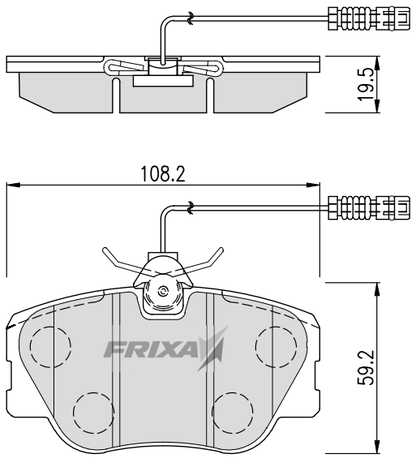

FPE180(FPE142) — LEXUS

PART NUMBER	**04465-33440**
REPRESENTATIVE MODEL	LEXUS ES300
INTERCHANGEABLE	TOYOTA CAMRY

PO	SP	HP	FMSI	WVA	TRW
FRONT (PAD)	SP2080		8331-D1222	24350	GDB3429

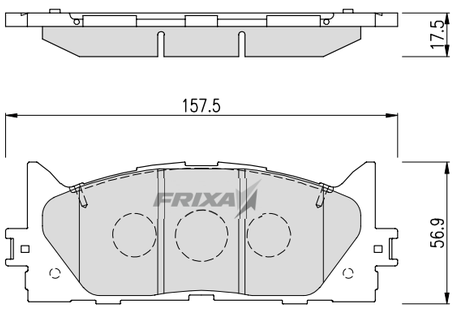

FPE181 — HONDA

PART NUMBER	**45022-SHJ-A50**
REPRESENTATIVE MODEL	CR-V
INTERCHANGEABLE	

PO	SP	HP	FMSI	WVA	TRW
FRONT (PAD)	SP2115	HP5169	D1089-7994	24342	GDB7727

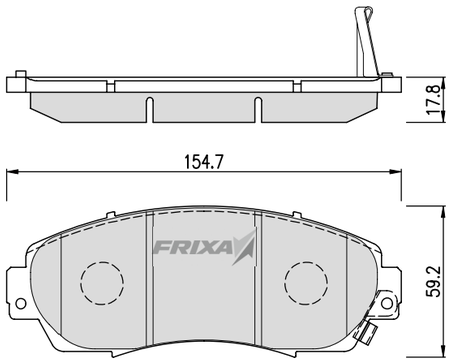

FPE182(FPE019) — TOYOTA

PART NUMBER	**04465-30340**
REPRESENTATIVE MODEL	CAMRY
INTERCHANGEABLE	

PO	SP	HP	FMSI	WVA	TRW
FRONT (PAD)	SP2037	HP5053	D908-7787	23928	GDB3314

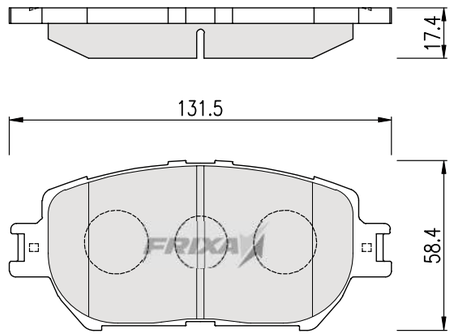

FPE183(S1BEN02) — MERCEDES-BENZ

PART NUMBER	**003 420 05 20**
REPRESENTATIVE MODEL	C200
INTERCHANGEABLE	S-CLASS, ML-CLASS

PO	SP	HP	FMSI	WVA	TRW
FRONT (PAD)	SP2193	HP5148	D847-7723	23045	GDB1454

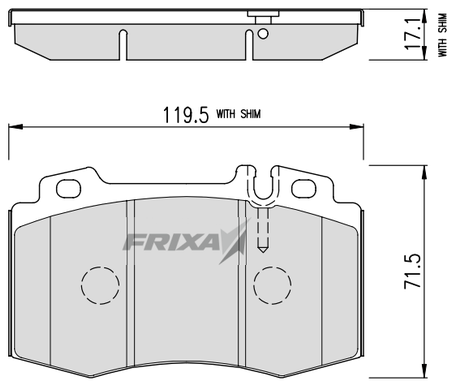

FPE184(S1VWN01) — VOLKSWAGEN

PART NUMBER	**1J0 698 151 K**
REPRESENTATIVE MODEL	VW GOLF 2.0TDI
INTERCHANGEABLE	

PO	SP	HP	FMSI	WVA	TRW
FRONT (PAD)	SP2097	HP8536	D555-7434	21848	GDB1440

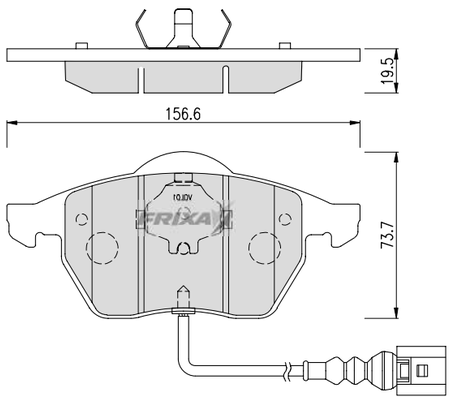

FOREIGN VEHICLES (PAD)

FPE185(S1HON02) HONDA

PART NUMBER	**06450-S0A-J00**
REPRESENTATIVE MODEL	HONDA ACCORD 3.5
INTERCHANGEABLE	

PO	SP	HP	FMSI	WVA	TRW
FRONT (PAD)	SP1076-F	HP5009	D503-7382	21651	GDB3177

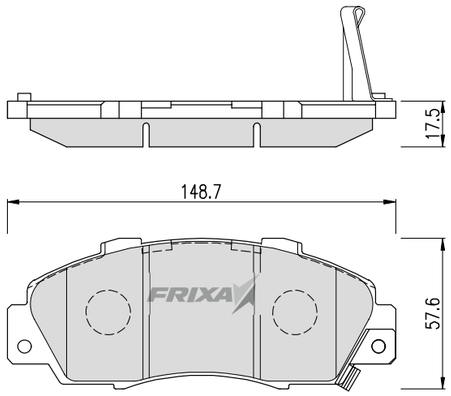

FPE186(S1BMW04) BMW

PART NUMBER	**34 11 1 160 356**
REPRESENTATIVE MODEL	BMW320D
INTERCHANGEABLE	

PO	SP	HP	FMSI	WVA	TRW
FRONT (PAD)	SP1388	HP5031	D781-7649	21292	GDB1348

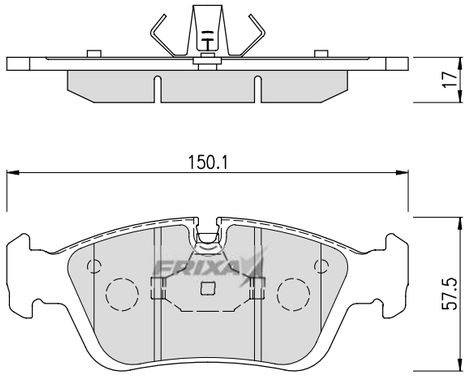

FPE187(S1BMW02) BMW

PART NUMBER	**34 11 6 763 617**
REPRESENTATIVE MODEL	BMW520D
INTERCHANGEABLE	

PO	SP	HP	FMSI	WVA	TRW
FRONT (PAD)	SP2159		D1061-7967	23793	GDB1559

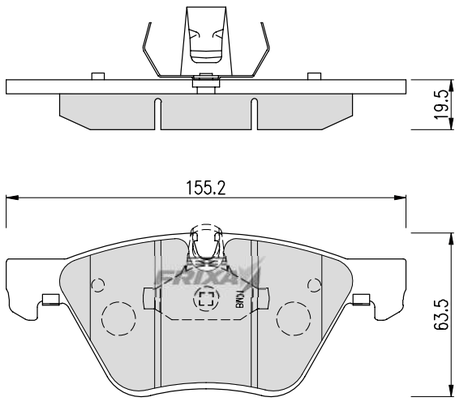

FPE189(S1AUD01) AUDI

PART NUMBER	**4G0 698 151**
REPRESENTATIVE MODEL	AUDI A4 2.0 TFSI
INTERCHANGEABLE	

PO	SP	HP	FMSI	WVA	TRW
FRONT (PAD)	SP2145		D1322-8434	24264	GDB1833

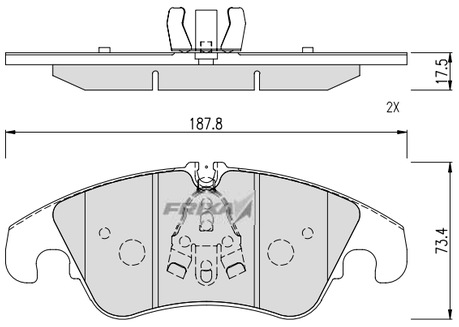

FPE190(S1LEX02) LEXUS

PART NUMBER	**04465-28510**
REPRESENTATIVE MODEL	ES330
INTERCHANGEABLE	

PO	SP	HP	FMSI	WVA	TRW
FRONT (PAD)	SP1372	HP5054	D906-7785	23855	GDB3612

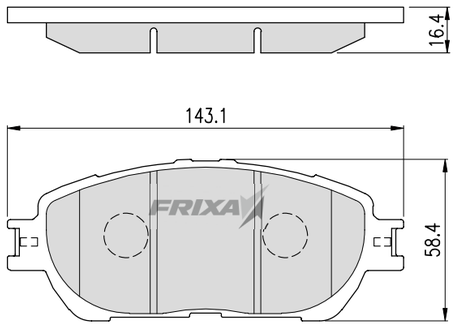

FPE191 HYUNDAI

PART NUMBER	**58101-B4A00**
REPRESENTATIVE MODEL	GRAND I10 F
INTERCHANGEABLE	

PO	SP	HP	FMSI	WVA	TRW
FRONT (PAD)	SP1719			25976	GDB3618

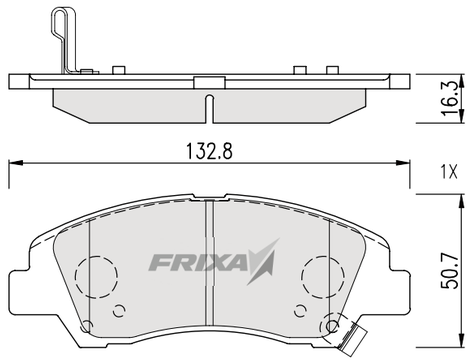

FPE192 MITSUBISHI

PART NUMBER	**MN 102 617**
REPRESENTATIVE MODEL	PICK UP L200 01~06
INTERCHANGEABLE	

PO	SP	HP	FMSI	WVA	TRW
FRONT (PAD)	SP1256	HP5251		23086	GDB3124

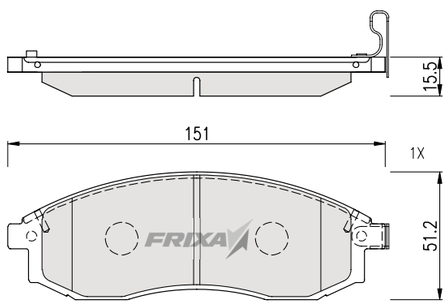

FPE193 MITSUBISHI

PART NUMBER	**46 05A 198**
REPRESENTATIVE MODEL	PICK UP L200 07~14
INTERCHANGEABLE	

PO	SP	HP	FMSI	WVA	TRW
FRONT (PAD)	SP1361		D1519-8728	24529	GDB3435

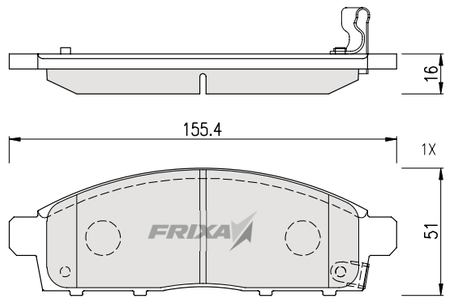

FPE194 — LAND ROVER

PART NUMBER	**107856041**
REPRESENTATIVE MODEL	RANGE ROVER
INTERCHANGEABLE	

PO	SP	HP	FMSI	WVA	TRW
FRONT (PAD)	SP2235		D1263-8380	20217	GDB1743

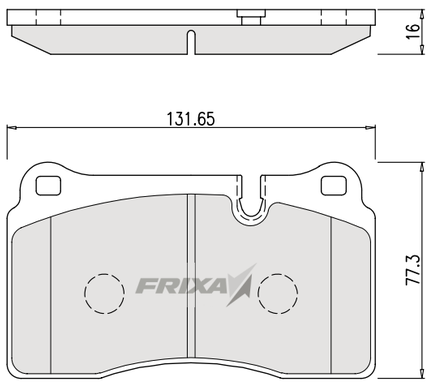

FPE195 — MAZDA

PART NUMBER	**DAY6-33-28ZA**
REPRESENTATIVE MODEL	MAZDA 2
INTERCHANGEABLE	

PO	SP	HP	FMSI	WVA	TRW
FRONT (PAD)	SP1974		D1852-9081	22235	GDB2122

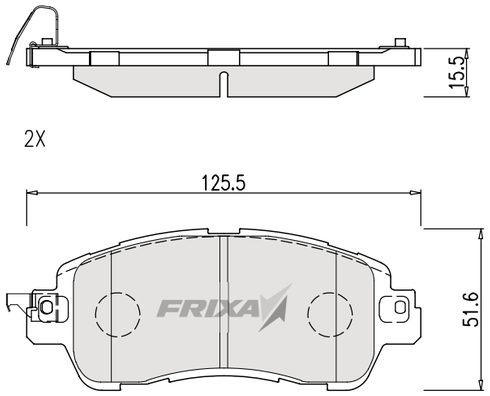

FPE196 — LEXUS

PART NUMBER	**04465-28510**
REPRESENTATIVE MODEL	LEXUS ES330
INTERCHANGEABLE	

PO	SP	HP	FMSI	WVA	TRW
FRONT (PAD)			D906-7785	23306	GDB3027

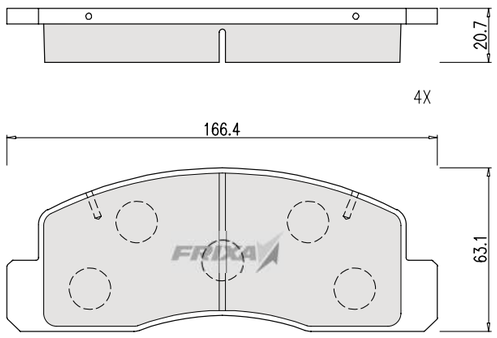

FPE197 — LEXUS

PART NUMBER	**04465-0C020**
REPRESENTATIVE MODEL	LEXUS
INTERCHANGEABLE	LX570

PO	SP	HP	FMSI	WVA	TRW
FRONT (PAD)	SP1381	HP5213	D1303-8419	24386	GDB3524

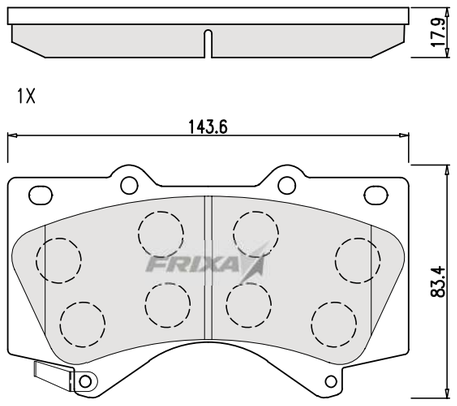

FPE212 — PEUGEOT

PART NUMBER	**16 078 783 80**
REPRESENTATIVE MODEL	BOCER 3
INTERCHANGEABLE	

PO	SP	HP	FMSI	WVA	TRW
FRONT (PAD)	SP1904		D1489-8689	24468	GDB1681

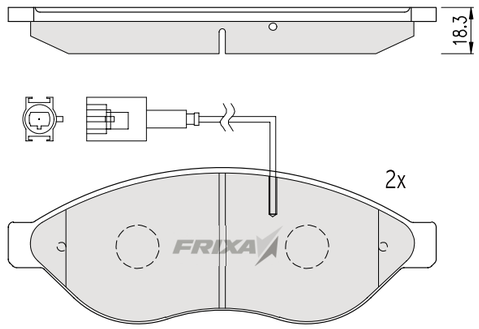

FPE213 — FORD

PART NUMBER	**1 379 971**
REPRESENTATIVE MODEL	GALAXY 3
INTERCHANGEABLE	

PO	SP	HP	FMSI	WVA	TRW
FRONT (PAD)	SP2101-F		D1306-8421	24123	GDB1683

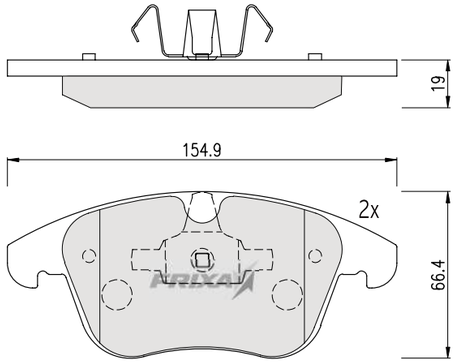

FPE214 — BMW

PART NUMBER	**34 11 1 160 356**
REPRESENTATIVE MODEL	3 SERIES (E36)
INTERCHANGEABLE	

PO	SP	HP	FMSI	WVA	TRW
FRONT (PAD)		HP5270	D558-7437	21292	GDB1100

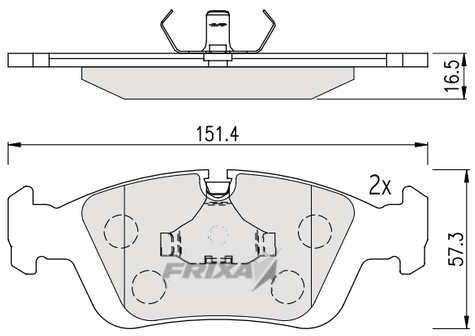

FPE215 — NISSAN

PART NUMBER	**41060-2F025**
REPRESENTATIVE MODEL	ALMERA 2
INTERCHANGEABLE	

PO	SP	HP	FMSI	WVA	TRW
FRONT (PAD)	SP1581			21546	GDB3271

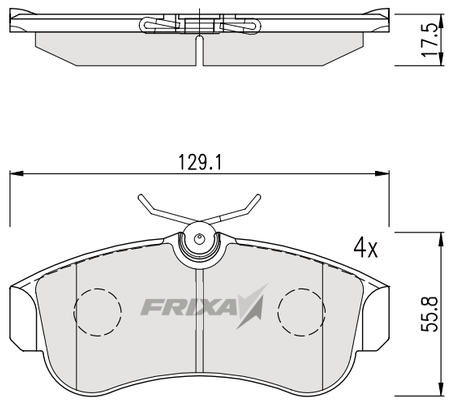

FPE216 — FORD

PART NUMBER	**1 371 454**
REPRESENTATIVE MODEL	TRANSIT 5
INTERCHANGEABLE	

PO	SP	HP	FMSI	WVA	TRW
REAR (PAD)			D1502-8701	22017	GDB1725

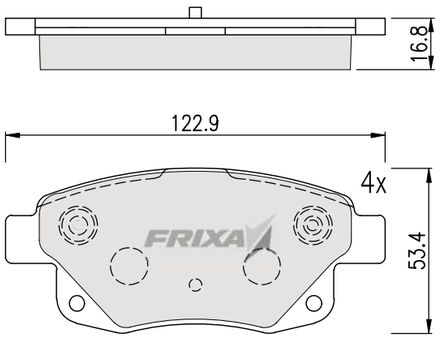

FPE217 — MERCEDES-BENZ

PART NUMBER	**000 421 24 10**
REPRESENTATIVE MODEL	SPRINTER 2-t(901,902)
INTERCHANGEABLE	

PO	SP	HP	FMSI	WVA	TRW
REAR (PAD)	SP4094		D951-7850	21621	GDB1262

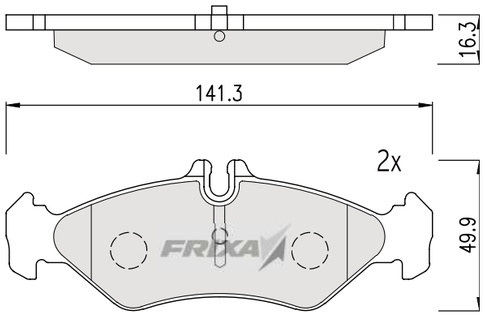

FPE218 — SUZUKI

PART NUMBER	**7 174 285 3**
REPRESENTATIVE MODEL	SX4
INTERCHANGEABLE	

PO	SP	HP	FMSI	WVA	TRW
FRONT (PAD)	SP1751			24391	GDB1673

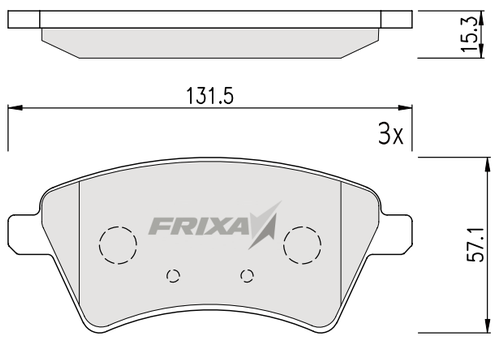

FPE219 — AUDI

PART NUMBER	**4B3 698 451**
REPRESENTATIVE MODEL	A3
INTERCHANGEABLE	A3 2 SPORTBACK

PO	SP	HP	FMSI	WVA	TRW
REAR (PAD)	SP2112-R	HP8542	D1018-7921	23326	GDB1516

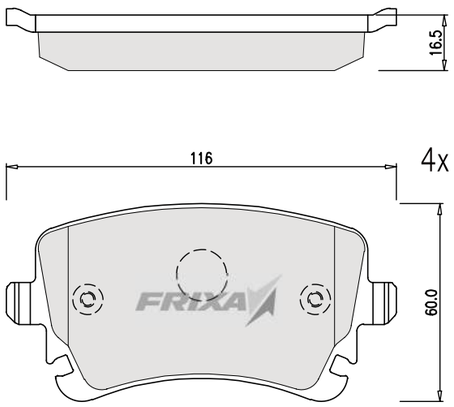

FPE220 — MERCEDES-BENZ

PART NUMBER	**005 420 08 20**
REPRESENTATIVE MODEL	C-CLASS (A205)
INTERCHANGEABLE	

PO	SP	HP	FMSI	WVA	TRW
FRONT (PAD)	SP2284		D1340-8421	24207	GDB2056

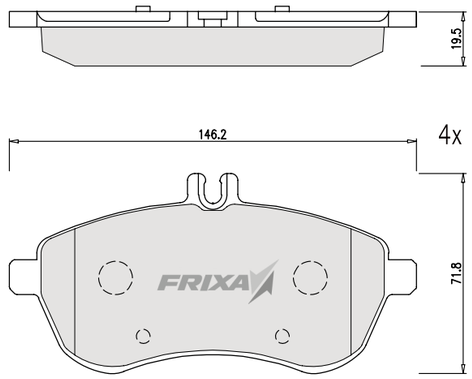

FPE221 — AUDI

PART NUMBER	**4E0 698 151 F**
REPRESENTATIVE MODEL	A4 (8D2, B5)
INTERCHANGEABLE	

PO	SP	HP	FMSI	WVA	TRW
FRONT (PAD)	SP2112-F	HP5254	D915-7796	23762	GDB1617

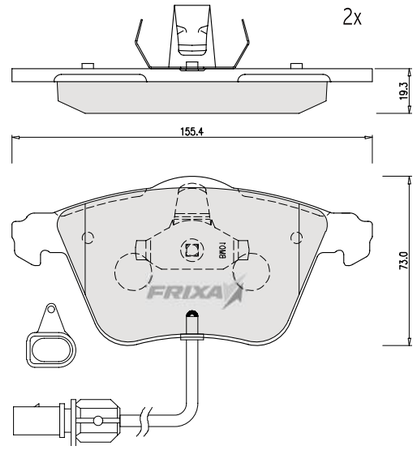

FPE222 — BMW

PART NUMBER	**34 21 6 763 043**
REPRESENTATIVE MODEL	5 SERIES (E61)
INTERCHANGEABLE	

PO	SP	HP	FMSI	WVA	TRW
REAR (PAD)	SP2157		D1042-7427	23732	GDB1727

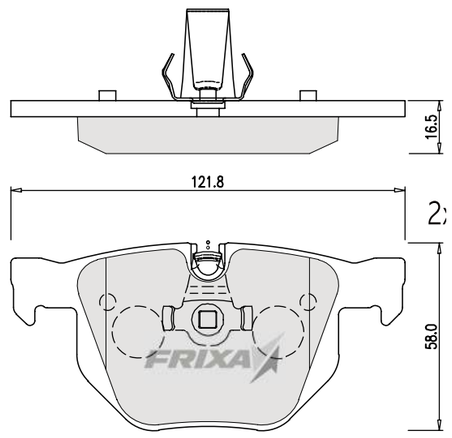

FPE223 — BMW

PART NUMBER	**34 21 6 768 471**
REPRESENTATIVE MODEL	5 SERIES (F07)
INTERCHANGEABLE	

PO	SP	HP	FMSI	WVA	TRW
REAR (PAD)	SP2164		D919-7820	23731	

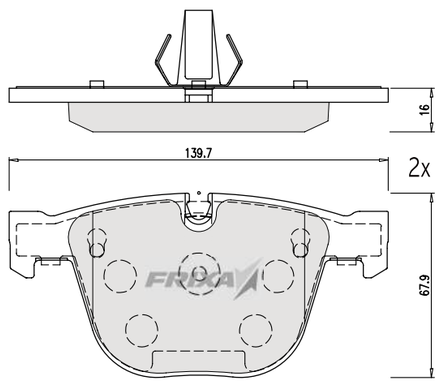

FPE224 — AUDI

PART NUMBER	**4G0 698 451**
REPRESENTATIVE MODEL	A6 IV (4G5, C7, 4GD)
INTERCHANGEABLE	YARIS

PO	SP	HP	FMSI	WVA	TRW
REAR (PAD)	SP2317		D1547-8785	24606	GDB1902

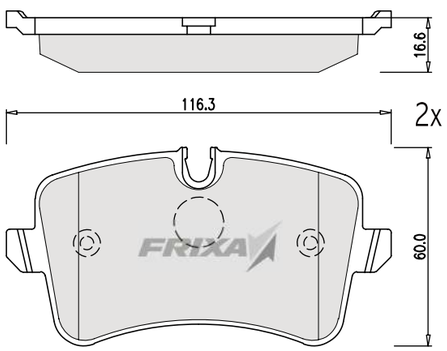

FPE225 — AUDI

PART NUMBER	**8K0 698 451**
REPRESENTATIVE MODEL	A4 (8K5, B8)
INTERCHANGEABLE	

PO	SP	HP	FMSI	WVA	TRW
REAR (PAD)	SP2146		D1386-8494	24606	GDB2107

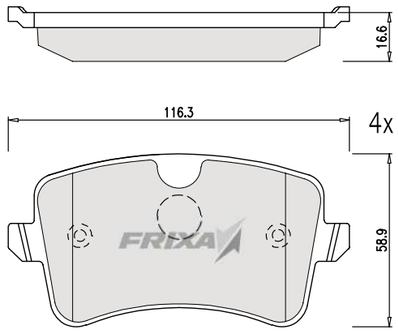

FPE227 — BMW

PART NUMBER	**34 11 6 775 310**
REPRESENTATIVE MODEL	5 SERIES (F11)
INTERCHANGEABLE	

PO	SP	HP	FMSI	WVA	TRW
FRONT (PAD)	SP1699		D1504-8705	23794	GDB1882

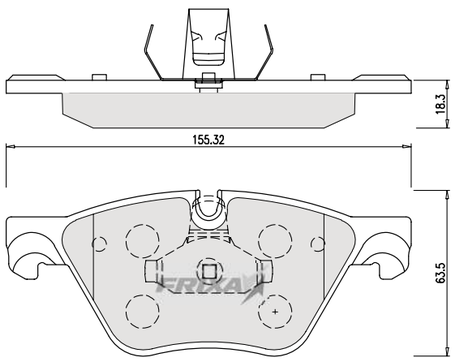

FPE229 — AUDI

PART NUMBER	**1K0 698 451 L**
REPRESENTATIVE MODEL	A6 (4G5, C7, 4GD)
INTERCHANGEABLE	

PO	SP	HP	FMSI	WVA	TRW
REAR (PAD)	SP2263		D1348-8213	22192	GDB1763

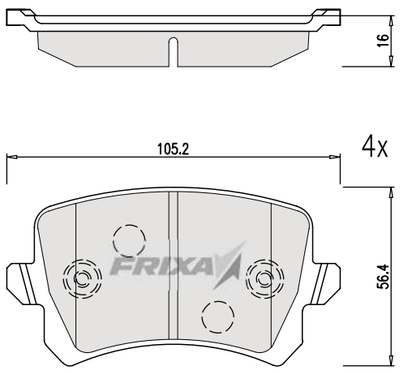

FPE233 — BMW

PART NUMBER	**34 20 6 879 857**
REPRESENTATIVE MODEL	5 SERIES (F11)
INTERCHANGEABLE	

PO	SP	HP	FMSI	WVA	TRW
REAR (PAD)	SP2275		D1473-8672	24561	GDB1840

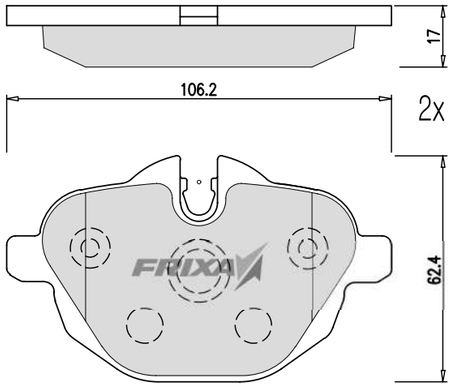

FPE234 — MINI

PART NUMBER	**34 21 6 772 894**
REPRESENTATIVE MODEL	MINI (R52)
INTERCHANGEABLE	

PO	SP	HP	FMSI	WVA	TRW
REAR (PAD)	SP2246		D1309-8424	24289	GDB1766

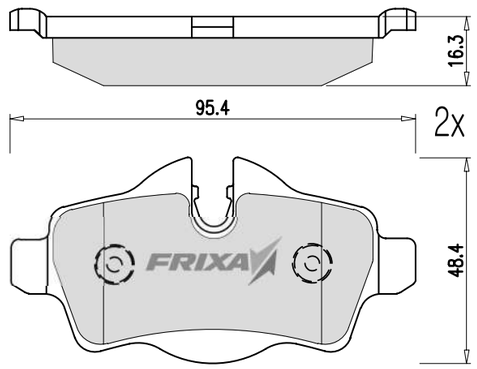

FPE235 — BMW

PART NUMBER	**34 11 6 767 143**
REPRESENTATIVE MODEL	1 SERIES (E88)
INTERCHANGEABLE	

PO	SP	HP	FMSI	WVA	TRW
FRONT (PAD)	SP2245		D1308-8423	23915	GDB1870

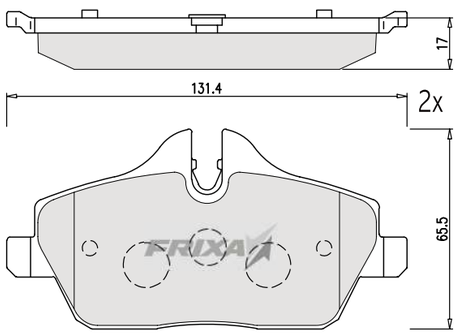

FPE236 — BMW

PART NUMBER	**34 21 6 775 342**
REPRESENTATIVE MODEL	B7 (F01,F02)
INTERCHANGEABLE	

PO	SP	HP	FMSI	WVA	TRW
REAR (PAD)	SP2213		D919-7820	23731	GDB1857

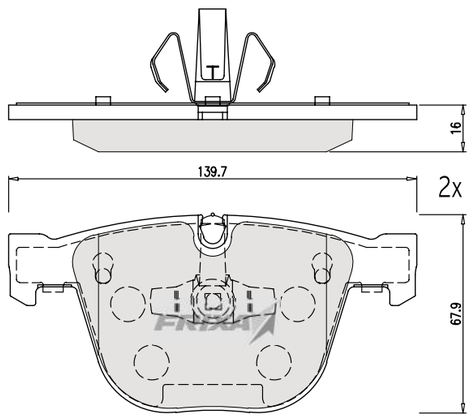

FOREIGN VEHICLES (PAD)

FPE237 — TOYOTA

PART NUMBER	**04465-02280**
REPRESENTATIVE MODEL	AVENSIS 3(ZRT27, ADT27)
INTERCHANGEABLE	

PO	SP	HP	FMSI	WVA	TRW
FRONT (PAD)	SP1580			24024	GDB3479

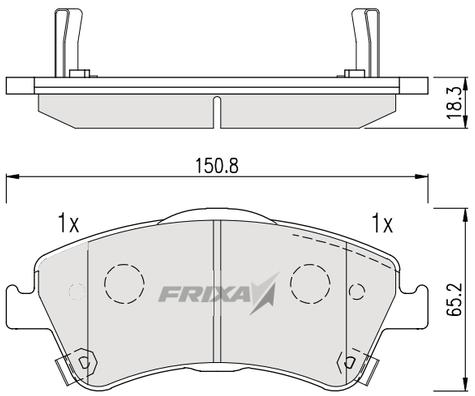

FPE238 — BMW

PART NUMBER	**34 11 4 074 370**
REPRESENTATIVE MODEL	X4(F26)
INTERCHANGEABLE	E CLASS

PO	SP	HP	FMSI	WVA	TRW
FRONT (PAD)	SP2172		D1294-8411	24170	GDB1726

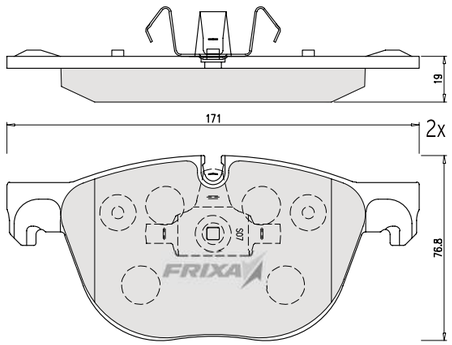

FPE239 — BMW

PART NUMBER	**34 21 6 776 937**
REPRESENTATIVE MODEL	X5 2 (E70)
INTERCHANGEABLE	TOYOTA CAMRY

PO	SP	HP	FMSI	WVA	TRW
REAR (PAD)	SP2215		D1042-7427	23447	GDB1730

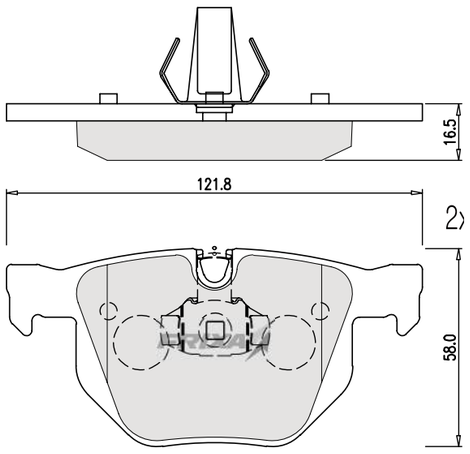

FPE240 — JEEP

PART NUMBER	**5080868AA**
REPRESENTATIVE MODEL	CHROKEE (2005~2010)
INTERCHANGEABLE	

PO	SP	HP	FMSI	WVA	TRW
FRONT (PAD)	SP1676	HP5258	D1080-7985	24250	GDB4136

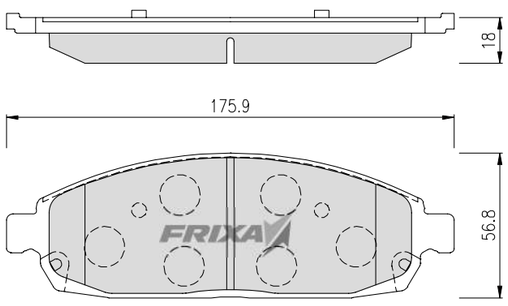

FPE241 — CHEVOLET

PART NUMBER	**1925 7667**
REPRESENTATIVE MODEL	TAHOE 2007
INTERCHANGEABLE	

PO	SP	HP	FMSI	WVA	TRW
FRONT (PAD)	SP1561		D1363-8803		

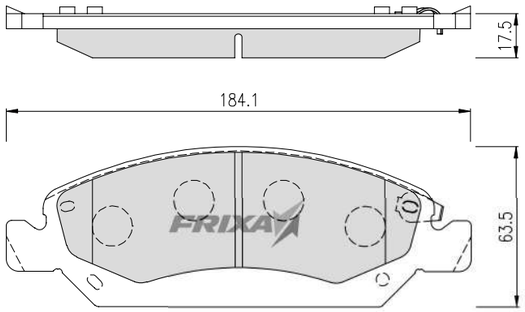

FPE242 — CHERY

PART NUMBER	**T11BJ3501080**
REPRESENTATIVE MODEL	MVM X33 R
INTERCHANGEABLE	

PO	SP	HP	FMSI	WVA	TRW
REAR (PAD)	SP1457		D1051-7955	23656	GDB3279

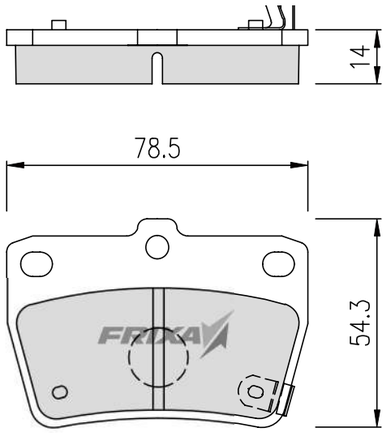

FPE244 — CHERY

PART NUMBER	**T113502080BA**
REPRESENTATIVE MODEL	MVM 530 R
INTERCHANGEABLE	

PO	SP	HP	FMSI	WVA	TRW
REAR (PAD)	SP2126-R		D1673-8902		GDB7816

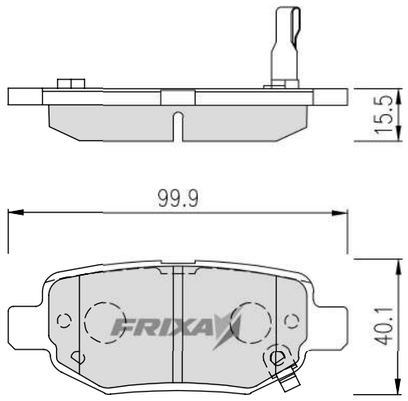

FPE246 — TOYOTA

PART NUMBER	**04465-02230**
REPRESENTATIVE MODEL	RAV4
INTERCHANGEABLE	

PO	SP	HP	FMSI	WVA	TRW
FRONT (PAD)	SP2138	HP5177	D1211-8331	24337	GDB3424

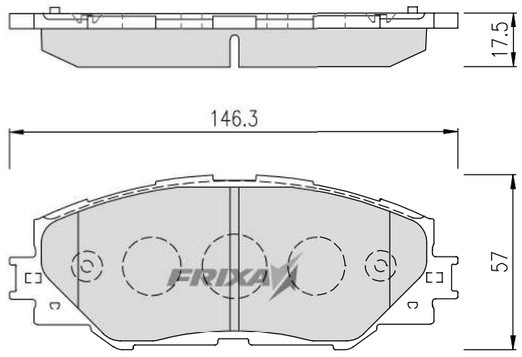

FOREIGN VEHICLES (PAD)

FPE247 — SEAT

PART NUMBER	**1J0 698 151 B**
REPRESENTATIVE MODEL	BERELIANCE
INTERCHANGEABLE	

PO	SP	HP	FMSI	WVA	TRW
FRONT (PAD)	SP1701	HP5168	D768-7860	21974	GDB1357

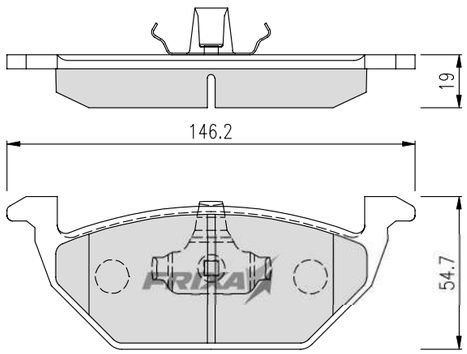

FPE248 — FAW

PART NUMBER	**G1YC-33-28ZC**
REPRESENTATIVE MODEL	BESTERN
INTERCHANGEABLE	

PO	SP	HP	FMSI	WVA	TRW
FRONT (PAD)	SP2027	HP5144	D1642-8869	24246	GDB3309

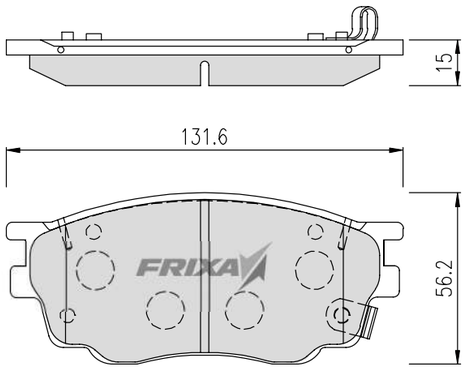

FPE252 — SUZUKI

PART NUMBER	**04465-BZ010**
REPRESENTATIVE MODEL	APV
INTERCHANGEABLE	

PO	SP	HP	FMSI	WVA	TRW
FRONT (PAD)	SP1589	HP1598	D1471-8671		GDB7656

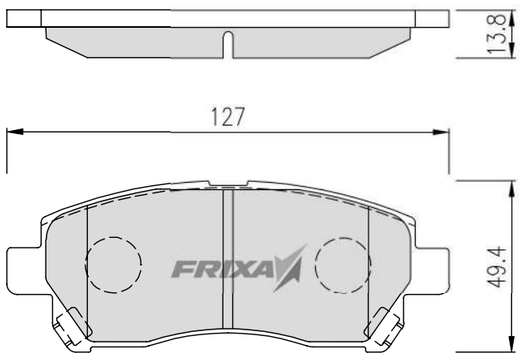

FPE255 — MITSUBISHI

PART NUMBER	**MR493173**
REPRESENTATIVE MODEL	MINICA
INTERCHANGEABLE	

PO	SP	HP	FMSI	WVA	TRW
FRONT (PAD)	SP1613	HP9284			GDB7177

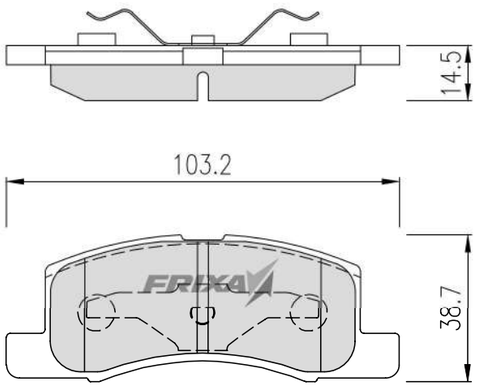

FPE256 — SUZUKI

PART NUMBER	**55810 54G11**
REPRESENTATIVE MODEL	LIANA
INTERCHANGEABLE	

PO	SP	HP	FMSI	WVA	TRW
FRONT (PAD)	SP1633	HP8441	D937-7839	24830	GDB7698

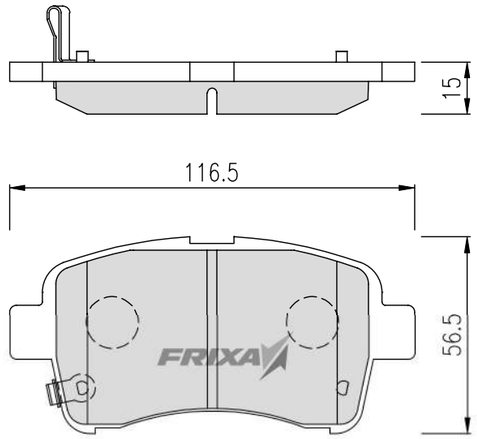

FPE260 — SUZUKI

PART NUMBER	**55200-50FA0**
REPRESENTATIVE MODEL	SUPER CARRY
INTERCHANGEABLE	

PO	SP	HP	FMSI	WVA	TRW
FRONT (PAD)		HP9730		23303	GDB3234

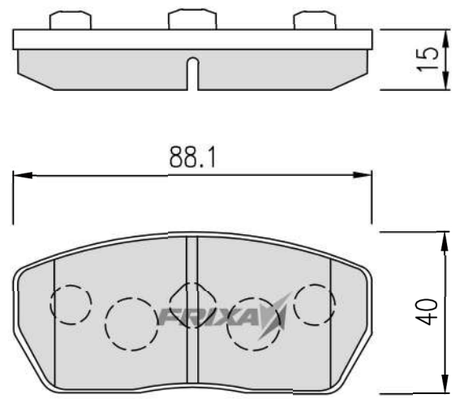

FPE261 — NISSAN

PART NUMBER	**D1060-F6494**
REPRESENTATIVE MODEL	SD22
INTERCHANGEABLE	

PO	SP	HP	FMSI	WVA	TRW
FRONT (PAD)	SP1095	HP8334	D265-7170	21099	

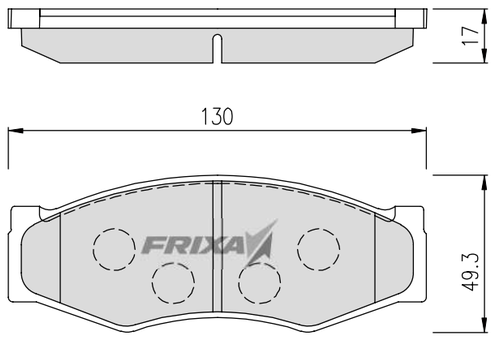

FPE262 — SUZUKI

PART NUMBER	**55810-75F00**
REPRESENTATIVE MODEL	WAGON R
INTERCHANGEABLE	

PO	SP	HP	FMSI	WVA	TRW
FRONT (PAD)	SP2021			23662	GDB3221

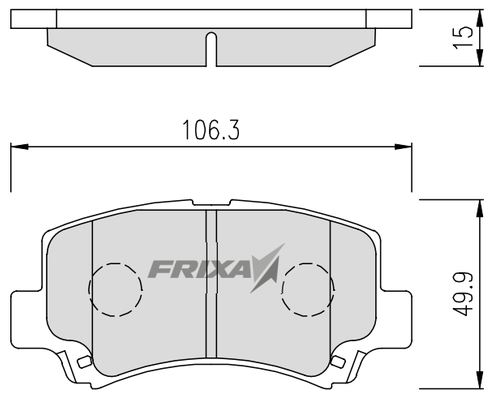

FOREIGN VEHICLES (PAD)

FPE264 — FORD

PART NUMBER	**DG9C-2001-AB**
REPRESENTATIVE MODEL	FUSION
INTERCHANGEABLE	

PO	SP	HP	FMSI	WVA	TRW
FRONT (PAD)			D1653-8882	22269	

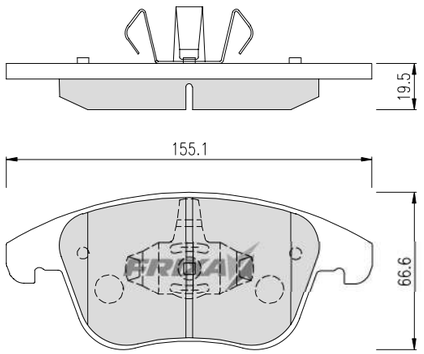

FPE265 — FORD

PART NUMBER	**DF9Z-2200-Z**
REPRESENTATIVE MODEL	FUSION R
INTERCHANGEABLE	

PO	SP	HP	FMSI	WVA	TRW
REAR (PAD)	SP4171		D1665-8893	22231	

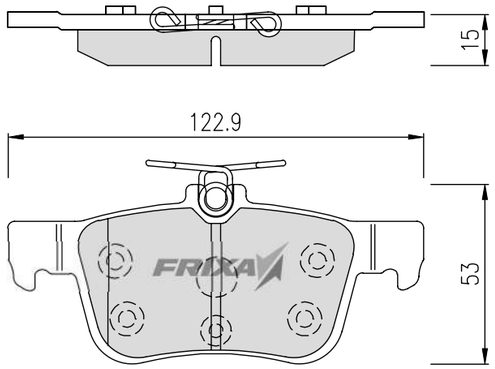

FPE266(S1VWN02) — VOLKSWAGEN

PART NUMBER	**1K0698151**
REPRESENTATIVE MODEL	TIGUAN
INTERCHANGEABLE	

PO	SP	HP	FMSI	WVA	TRW
FRONT (PAD)	SP2098		D1107-8212	23589	GDB1550

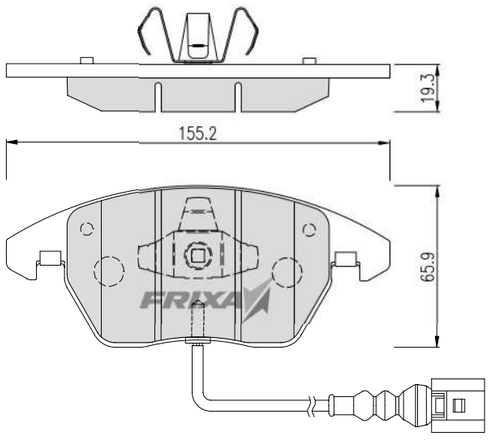

FPE267 — EM

PART NUMBER	**4252.22**
REPRESENTATIVE MODEL	GRAND7
INTERCHANGEABLE	

PO	SP	HP	FMSI	WVA	TRW
FRONT (PAD)	SP2073		D1541-8749	23600	GDB1464

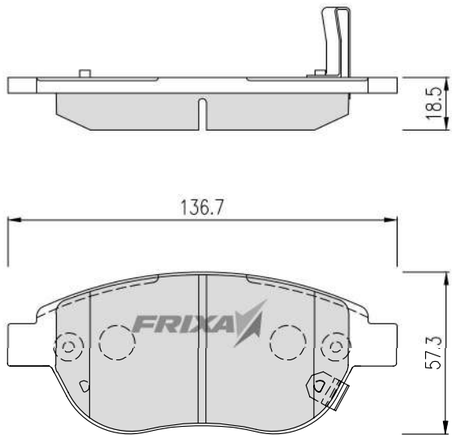

FPE268 — EM

PART NUMBER	**4253.22**
REPRESENTATIVE MODEL	GRAND7 R
INTERCHANGEABLE	

PO	SP	HP	FMSI	WVA	TRW
REAR (PAD)	SP2100		1621-8833	24150	GDB1620

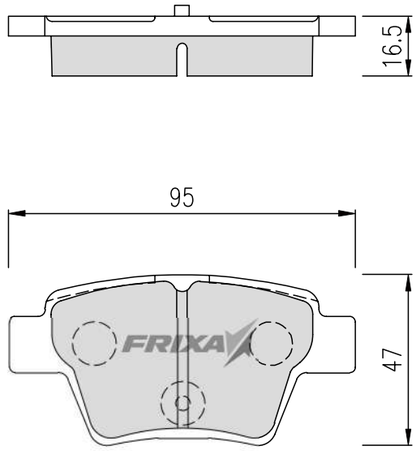

FPE366 — MERCEDES-BENZ

PART NUMBER	**003 420 65 20**
REPRESENTATIVE MODEL	E-CLASS(W211)
INTERCHANGEABLE	

PO	SP	HP	FMSI	WVA	TRW
FRONT (PAD)	SP2194		D987-7889	23428	GDB1542

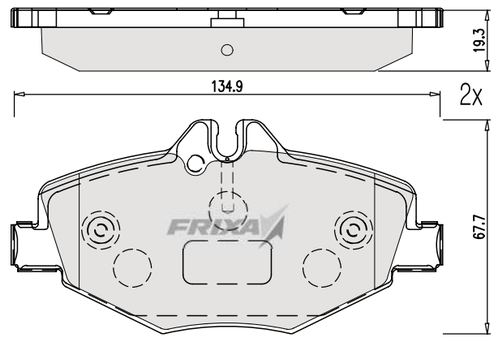

FLE01 — RENAULT

PART NUMBER	440609415R
REPRESENTATIVE MODEL	CLIO2 BOX R(98.09~)
INTERCHANGEABLE	CLIO Mk2, LOGAN 1, LOGAN 2, THALIA 1

PO	SP	HP	FMSI	WVA	TRW
REAR (SHOE ASS'Y)	SA177				GS8455

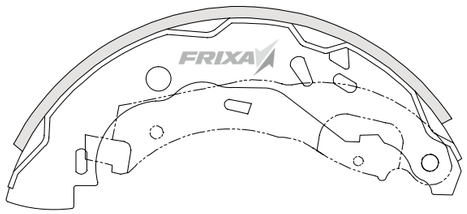

FLE02 — SUZUKI

PART NUMBER	53200-76G20
REPRESENTATIVE MODEL	ALTO 1000CC R
INTERCHANGEABLE	CHEVROLET CRUZE,IGNIS,KEI MR WAGON,SWIFT TWIN, WAGON R

PO	SP	HP	FMSI	WVA	TRW
REAR (SHOE ASS'Y)					GS8476

FLE03 — SUZUKI

PART NUMBER	52210-79260
REPRESENTATIVE MODEL	ST308 R/JEEP R
INTERCHANGEABLE	ALTO, CARRY, EVERY

PO	SP	HP	FMSI	WVA	TRW
REAR (SHOE ASS'Y)					GS8195

FLE04 — SUZUKI

PART NUMBER	53210-70C10
REPRESENTATIVE MODEL	MARGALLA/LIAYNA 1.6 R
INTERCHANGEABLE	SWIFT

PO	SP	HP	FMSI	WVA	TRW
REAR (SHOE ASS'Y)					GS8549

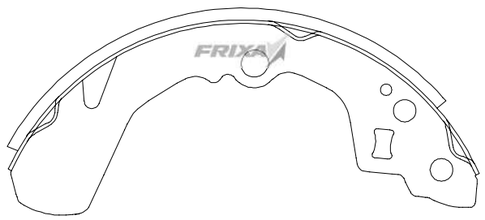

FLE05 — TOYOTA

PART NUMBER	04495-12090
REPRESENTATIVE MODEL	EE80 R
INTERCHANGEABLE	CAMRY,CARINA,CELICA,COROLLA,CURREN,SPACIO SPRINTER

PO	SP	HP	FMSI	WVA	TRW
REAR (SHOE ASS'Y)					GS8224

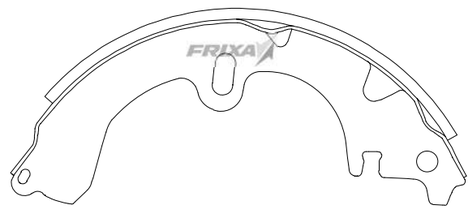

FLE06 — SUZUKI

PART NUMBER	53210-84010
REPRESENTATIVE MODEL	ALTO R
INTERCHANGEABLE	CERVO,FRONTE

PO	SP	HP	FMSI	WVA	TRW
REAR (SHOE ASS'Y)			1363-591		GS8302

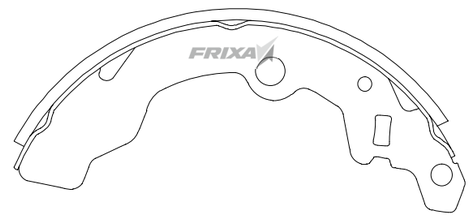

FLE07 — SUZUKI

PART NUMBER	53200-82810
REPRESENTATIVE MODEL	SWIFT R
INTERCHANGEABLE	

PO	SP	HP	FMSI	WVA	TRW
REAR (SHOE ASS'Y)			1384-550		GS8248

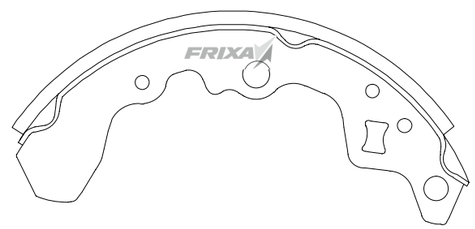

FLE08 — SUZUKI

PART NUMBER	52210-79030
REPRESENTATIVE MODEL	ST 30 R
INTERCHANGEABLE	

PO	SP	HP	FMSI	WVA	TRW
REAR (SHOE ASS'Y)					

FOREIGN VEHICLES (LINING)

FLE09 — TOYOTA

PART NUMBER	**04495-26140**
REPRESENTATIVE MODEL	HIACE 2002 PIN DIFFERNCE AS K 2330 R
INTERCHANGEABLE	LITEACE,TOWNACE

PO	SP	HP	FMSI	WVA	TRW
REAR (SHOE ASS'Y)					GS8593

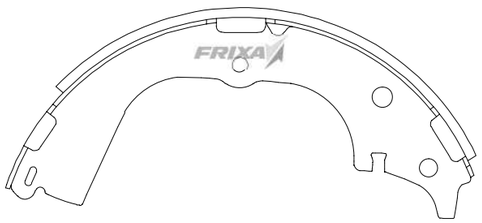

FLE10 — TOYOTA

PART NUMBER	**04497-26020**
REPRESENTATIVE MODEL	HILUX 84 R
INTERCHANGEABLE	HIACE, DYNA/TOYOACE

PO	SP	HP	FMSI	WVA	TRW
REAR (SHOE ASS'Y)					GS8171

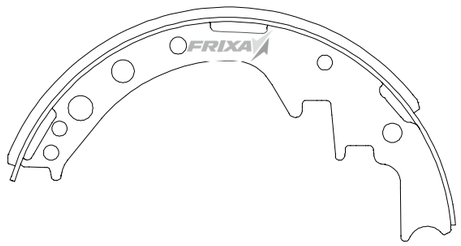

FLE11 — TOYOTA

PART NUMBER	**04494-26030**
REPRESENTATIVE MODEL	HILUX 4*2 R
INTERCHANGEABLE	

PO	SP	HP	FMSI	WVA	TRW
REAR (SHOE ASS'Y)					GS8143

FLE12 — TOYOTA

PART NUMBER	**04495-60020**
REPRESENTATIVE MODEL	LAND CRUISER R
INTERCHANGEABLE	DYNA/TOYOACE

PO	SP	HP	FMSI	WVA	TRW
REAR (SHOE ASS'Y)					GS8502

FLE13 — TOYOTA

PART NUMBER	**04495-35151**
REPRESENTATIVE MODEL	4*4 HILUX 89-2006 R
INTERCHANGEABLE	DYNA/TOYOACE, LAND CRUISER,TACOMA TUNDRA, HIACE

PO	SP	HP	FMSI	WVA	TRW
REAR (SHOE ASS'Y)					GS8501

FLE14 — TOYOTA

PART NUMBER	**04495-26180**
REPRESENTATIVE MODEL	HIACE LH114 R
INTERCHANGEABLE	

PO	SP	HP	FMSI	WVA	TRW
REAR (SHOE ASS'Y)					GS8693

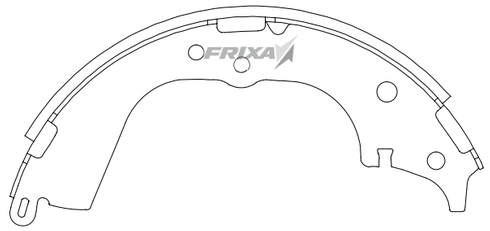

FLE15 — KHODRO

PART NUMBER	
REPRESENTATIVE MODEL	NEW SAMAND EF7 R
INTERCHANGEABLE	

PO	SP	HP	FMSI	WVA	TRW
REAR (SHOE ASS'Y)					

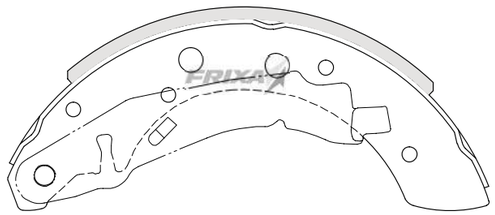

FLE16 — NISSAN

PART NUMBER	**41060-T3226**
REPRESENTATIVE MODEL	SAIPA
INTERCHANGEABLE	ZAMYAD

PO	SP	HP	FMSI	WVA	TRW
FRONT (SHOE ASS'Y)					GS7022

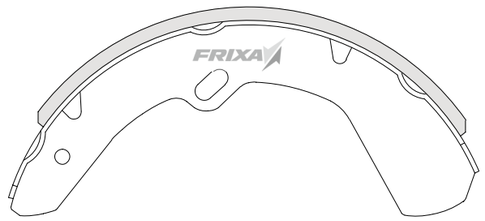

FLE17 — NISSAN

PART NUMBER	**41060-T9627**
REPRESENTATIVE MODEL	SAIPA R
INTERCHANGEABLE	ATALAS CONDOR

PO	SP	HP	FMSI	WVA	TRW
REAR (SHOE ASS'Y)					GS7017

FLE18 — HYUNDAI

PART NUMBER	**58305 B4A70**
REPRESENTATIVE MODEL	GRAND I10 R
INTERCHANGEABLE	CLICK 8", ALL NEW PRIDE

PO	SP	HP	FMSI	WVA	TRW
REAR (SHOE ASS'Y)	SA133				GS8785

FLE023 — PEUGEOT

PART NUMBER	**4241K1**
REPRESENTATIVE MODEL	405 R
INTERCHANGEABLE	

PO	SP	HP	FMSI	WVA	TRW
REAR (SHOE ASS'Y)	SA158				GS8272

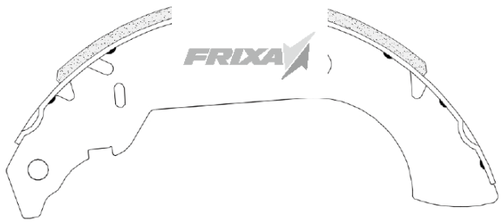

FLE024 — PEUGEOT

PART NUMBER	**4241K5**
REPRESENTATIVE MODEL	206 1.4 R
INTERCHANGEABLE	4241N1

PO	SP	HP	FMSI	WVA	TRW
REAR (SHOE ASS'Y)	SA157				GS8642

New Brake Pads·Linings

FRIXA BRAKE SYSTEM

Did you notice that the brake pedal is typically bigger than the acceleration pedal in a car?

For most cars, stopping is more critical than accelerating In order to achieve certain speed specifications, the car must come with an equally strong brake system.
The brake pads/linings are keeping your life safe when you enjoy driving.

New Brake Pads · Linings, FRIXA

To save lives, the brake system must operate instantaneously,
1 second and 1 cm faster.
With worldwide patents on state-of-the-art brake materials and technologies,
FRIXA Co., Ltd. deeply cares about brake power, brake reliability, brake noise,
the environment, and most importantly, human life.
Please look at your brake pads / linings now!
Then, switch to FRIXA brake pads / linings.
FRIXA, newly improved brake pads / linings, will keep your life safe.

FRIXA BRAKE SYSTEM
172, Guryong-ri, Byeollyang-myon, Suncheon-city, Jeonnam, Korea
Tel : +82-61-742-5821 Fax : +82-61-742-5825
Web-page : www.frixa.com E-mail : export@frixa.com

TM FRIXA BRAKE SYSTEM

Distributed by Hankook driving emotion

Office Tel. +82-2-3675-9622

Office Hours Weekdays 09:00 ~ 18:00

E-mail export@frixa.com

http://www.frixa.com